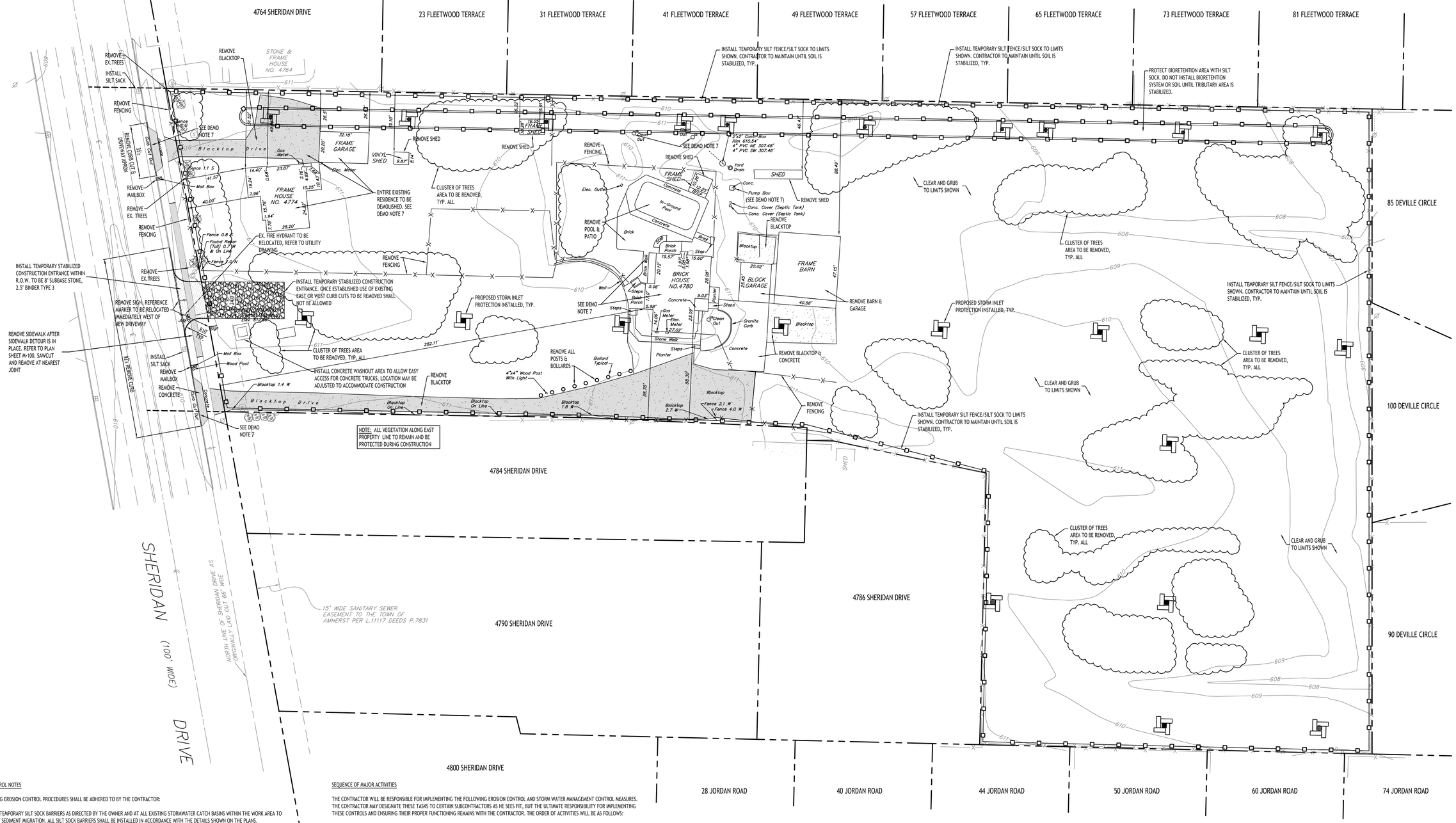

Demolition & Erosion Control Plan

SCALE: 1"=30'

EROSION CONTROL NOTES

THE FOLLOWING EROSION CONTROL PROCEDURES SHALL BE ADHERED TO BY THE CONTRACTOR:

1. INSTALL TEMPORARY SILT SOCK BARRIERS AS DIRECTED BY THE OWNER AND AT ALL EXISTING STORMWATER CATCH BASINS WITHIN THE WORK AREA TO PREVENT SEDIMENT MIGRATION. ALL SILT SOCK BARRIERS SHALL BE INSTALLED IN ACCORDANCE WITH THE DETAILS SHOWN ON THE PLANS.
2. TOPSOIL SHALL BE STRIPPED AND STOCKPILED ON SITE FOR RE-USE AS DIRECTED BY THE OWNER. ALL LOCAL ORDINANCES REGARDING THE SALE OF TOPSOIL MUST BE FOLLOWED. TOPSOIL MAY NOT BE REMOVED WITHOUT A PERMIT.
3. ALL SILT SOCK BARRIERS SHALL BE REPLACED WHEREVER THEY BECOME CLOGGED OR INOPERABLE.
4. THE CONTRACTOR SHALL BE RESPONSIBLE FOR MAINTENANCE AND REMOVAL OF TEMPORARY SEDIMENTATION CONTROLS.
5. THE CONTRACTOR MUST CONTROL DUST DURING CONSTRUCTION. DURING EARTHWORK OPERATIONS, WATER-SPREADING EQUIPMENT SHALL BE PROVIDED BY THE CONTRACTOR, AND SPREAD WATER AS NECESSARY AND AS DIRECTED BY THE OWNER IN ORDER TO CONTROL DUST.
6. DIRT OR DEBRIS LEFT ON LOCAL PUBLIC ROADS AS A RESULT OF THIS CONSTRUCTION PROJECT SHALL BE REMOVED AND ROAD SURFACES CLEANED BY THE CONTRACTOR ON A DAILY BASIS.
7. ALL DISTURBED AREAS (EXCEPT AREAS TO BE PAVED OR BUILT UPON) SHALL BE TOPSOILED TO A MINIMUM 4" DEPTH AND SEEDED IMMEDIATELY AFTER FINE GRADING TAKES PLACE AND AS SOON AS PHYSICALLY POSSIBLE.
8. THE CONTRACTOR IS RESPONSIBLE FOR THE MAINTENANCE OF DOWNSTREAM STORM SEWERS, DITCHES, AND CULVERTS. SILT BUILDUP FOUND TO BE A RESULT OF THIS SITE CONSTRUCTION WORK SHALL BE REMOVED FROM DOWNSTREAM CULVERTS BY THE CONTRACTOR AT NO ADDITIONAL EXPENSE TO THE OWNER OR THE TOWN/CITY.
9. ALL SOIL EROSION AND SEDIMENT CONTROL DEVICES AND MATERIALS SHALL BE IN PLACE PRIOR TO BEGINNING EARTHWORK OPERATIONS AND SHALL BE MAINTAINED UNTIL THE NEW SLOPES ARE STABILIZED WITH SEEDING AND/OR SLOPE PROTECTION, AS DIRECTED BY THE ENGINEER.
10. INSTALL TEMPORARY SILT SOCK AROUND THE BASE OF STOCKPILES. STOCKPILES NOT BEING ACTIVELY USED FOR MORE THAN SEVEN (7) DAYS SHALL BE STABILIZED.
11. THE PROFESSIONAL CERTIFYING COMPLIANCE TO NYSDEC PHASE II STORMWATER REGULATION REQUIREMENTS MUST INSPECT AT A MINIMUM WEEKLY, AND WHEN DISTURBING MORE THAN 5 ACRES TWICE A WEEK, AND SHALL PROVIDE THESE INSPECTION REPORT WITH A WRITTEN CERTIFICATION OF CONSTRUCTION COMPLIANCE TO THE TOWN OF AMHERST (BI)WEEKLY.
12. THE ENGINEER OF RECORD FOR THIS PROJECT CERTIFIES THAT THESE DESIGN PLANS MEET THE REQUIREMENTS AND ARE IN COMPLIANCE WITH THE NEW YORK STORMWATER MANAGEMENT DESIGN MANUAL AND NYSDEC PHASE II STORMWATER REGULATION REQUIREMENTS.

SEQUENCE OF MAJOR ACTIVITIES

THE CONTRACTOR WILL BE RESPONSIBLE FOR IMPLEMENTING THE FOLLOWING EROSION CONTROL AND STORM WATER MANAGEMENT CONTROL MEASURES. THE CONTRACTOR MAY DESIGNATE THESE TASKS TO CERTAIN SUBCONTRACTORS AS HE SEES FIT, BUT THE ULTIMATE RESPONSIBILITY FOR IMPLEMENTING THESE CONTROLS AND ENSURING THEIR PROPER FUNCTIONING REMAINS WITH THE CONTRACTOR. THE ORDER OF ACTIVITIES WILL BE AS FOLLOWS:

A. INSTALL STABILIZED CONSTRUCTION ENTRANCE
B. INSTALL PERIMETER SILT FENCES/SILT SOCK IN THE LOCATIONS SHOWN ON THE DEMOLITION AND EROSION CONTROL PLAN SHEET.
C. CLEAR & GRUB SITE.
D. INSTALLATION OF UNDERGROUND DETENTION BASIN.
E. COMMENCE SITE GRADING.
F. DISTURBED AREAS OF THE SITE WHERE CONSTRUCTION ACTIVITY HAS CEASED FOR MORE THAN 14 DAYS SHALL BE TEMPORARILY SEEDED AND WATERED.
G. CONSTRUCTION OF BUILDINGS.
H. INSTALLATION OF PROPOSED UTILITIES.
I. FINALIZE PAVEMENT SUBGRADE PREPARATION.
J. CONSTRUCT ALL CURB, DRAINAGE INLETS, STORM SEWER PIPES AND STORM SEWER MANHOLES, AS SHOWN ON PLANS. INSTALL TEMPORARY INLET PROTECTION AT THE LOCATION OF ALL INLETS.
K. DUCT CONTROL.
L. REMOVE INLET PROTECTION AROUND INLETS AND MANHOLES NO MORE THAN 48 HOURS PRIOR TO PLACING STABILIZED BASE COURSE.
M. INSTALL BASE MATERIAL AS REQUIRED FOR PAVEMENT.
N. CARRY OUT FINAL GRADING AND SEEDING AND PLANTINGS.
O. CLEAN STORM SYSTEM FOLLOWING CONSTRUCTION, CLEAN UNDERGROUND DETENTION BASIN AS PER MANUFACTURER RECOMMENDATIONS.
P. REMOVE SILT FENCE/SILT SOCK ONLY AFTER ALL PAVING IS COMPLETE AND EXPOSED SURFACES ARE STABILIZED.
Q. REMOVE TEMPORARY CONSTRUCTION EXITS ONLY PRIOR TO PAVEMENT CONSTRUCTION IN THESE AREAS.

DEMOLITION NOTES:

1. ALL PERIMETER SILT SOCK TO BE INSTALLED PRIOR TO CONSTRUCTION ACTIVITY BEGINNING.
2. CONTRACTOR SHALL TAKE PRECAUTIONS TO PROTECT THOSE ITEMS TO REMAIN, SUCH AS TREES, PROPERTY CORNER PINS, UTILITY POLES, VALVES, HYDRANTS, CURBS, MANHOLES AND CATCH BASINS.
3. TEMPORARY SILT SOCK TO BE INSTALLED AS DIRECTED BY THE OWNERS FIELD REPRESENTATIVE. MAINTAIN UNTIL VEGETATION IS ESTABLISHED AND PAVEMENT IS INSTALLED.
4. AS NECESSARY, COVERED DUMPSTERS SHALL BE PROVIDED ONSITE AS REQUIRED FOR CONSTRUCTION WASTE.
5. REMOVE ALL TREES AND STUMPS AS SHOWN AND DISPOSE OF OFF SITE. CONTRACTOR TO PROTECT ALL TREES/BRUSH NOT DISTURBED BY CONSTRUCTION ACTIVITY. LOCATIONS OF TREES SHOWN ON PLAN ARE APPROXIMATE, CONTRACTOR TO CONFIRM LOCATION PRIOR TO CONSTRUCTION.
6. CONTRACTOR TO COORDINATE WITH TOWN LANDSCAPE ARCHITECT WHICH TREES SHALL BE REMOVED AND WHICH SHALL REMAIN AND BE PROTECTED DURING CONSTRUCTION.
7. EXISTING CURB AND REMOVAL OF EXISTING ENTRANCE SHALL BE SAW CUT FULL-DEPTH AND NEATLY REMOVED FROM THE BACKSIDE, EXISTING PAVEMENT SHALL NOT BE DISTURBED AND THE PAVEMENT EDGE SHALL BE USED AS FORM FOR PLACING NEW CURB.
8. THE NORTHERN LONG-EARED BAT (NLEB) (MYOTIS SEPTENTRIONALIS) IS AN ENDANGERED SPECIES WHICH ENCOMPASSES ALL OF NEW YORK STATE AND IS REGULATED UNDER U.S. FISH AND WILDLIFE SERVICE (USFWS) AND NEW YORK STATE DEPARTMENT OF ENVIRONMENTAL CONSERVATION (NYSDEC). PLEASE ADVISE THE PERMITTEE THAT SHOULD TREE REMOVALS BE NECESSARY IN THE NYSDOT RIGHT-OF-WAY (ROW), THE PERMITTEE IS RESPONSIBLE FOR COORDINATING AND OBTAINING ALL THE NECESSARY PERMITS AND APPROVALS WITH THE NYSDEC. FURTHERMORE, TREES WILL NOT BE PERMITTED TO BE CUT ON STATE RIGHT-OF-WAY (ROW) FROM MAY 1ST THROUGH JULY 31ST, TO PROTECT THE PUP SEASON FOR THE NLEB. THE PERMITTEE WILL BE REQUIRED TO PROVIDE PROOF OF COORDINATION PRIOR TO NYSDOT ISSUING THE HIGHWAY WORK PERMIT" TO THE PLAN SHEETS.

DEMOLITION & EROSION CONTROL LEGEND

EXISTING PAVEMENT TO BE SAWCUT & REMOVED
PROPOSED SILT SOCK
EXISTING TREE TO BE REMOVED
PROPOSED STORM INLET PROTECTION

NOTE: BOUNDARY AND TOPOGRAPHIC INFORMATION PROVIDED BY OTHERS, CARMINA WOOD DESIGN ASSUMES NO RESPONSIBILITY FOR ITS ACCURACY.

30' 30 0 30 60Ft.

CARMINAWOOD DESIGN
Buffalo | Utica | Greensboro

Proposed Multi-Family

4774 & 4780 Sheridan Drive
Amherst, NY

REVISIONS:

No.	Description	Date
1	Rev. per Town comments	6/12/24
2	Rev. per DOT comments	11/1/24
3	Rev. per DOT comments	2/3/25
4	Clump tree areas added	2/18/25

STATE OF NEW YORK · R. CHRISTOPHER WOOD · 076394 · LICENSED PROFESSIONAL ENGINEER

DRAWING NAME:
Demolition & Erosion Control Plan

Date: 4/22/24
Drawn By: P. Sheedy
Scale: As Noted

DRAWING NO.
C-001

Project No: 23-4091

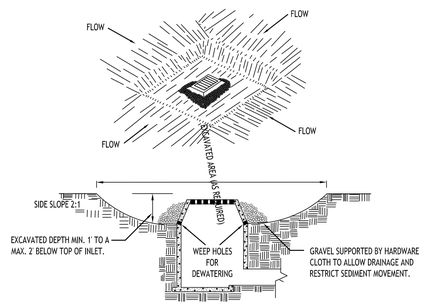

CONSTRUCTION SPECIFICATIONS

1. CLEAR THE AREA OF ALL DEBRIS THAT WILL HINDER EXCAVATION.
2. GRADE APPROACH TO THE INLET UNIFORMLY AROUND THE BASIN.
3. WEEP HOLES SHALL BE PROTECTED BY GRAVEL.
4. UPON STABILIZATION OF CONTRIBUTING DRAINAGE AREA, SEAL WEEP HOLES, FILL BASIN WITH STABLE SOIL TO FINAL GRADE, COMPACT IT PROPERLY AND STABILIZE WITH PERMANENT SEEDING.

MAXIMUM DRAINAGE AREA 1 ACRE

INLET PROTECTION DETAIL 1

NOT TO SCALE

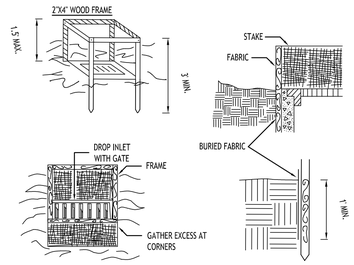

CONSTRUCTION SPECIFICATIONS

1. FILTER FABRIC SHALL HAVE AN EOS OF 40-85. BURLAP MAY BE USED FOR SHORT TERM APPLICATIONS.
2. CUT FABRIC FROM A CONTINUOUS ROLL TO ELIMINATE JOINTS. IF JOINTS ARE NEEDED THEY WILL BE OVERLAPPED TO THE NEXT STAKE.
3. STAKE MATERIALS WILL BE STANDARD 2" x 4" WOOD OR EQUIVALENT. METAL WITH A MINIMUM LENGTH OF 3 FEET.
4. SPACE STAKES EVENLY AROUND INLET 3 FEET APART AND DRIVE A MINIMUM 18 INCHES DEEP. SPANS GREATER THAN 3 FEET MAY BE BRIDGED WITH THE USE OF WIRE MESH BEHIND THE FILTER FABRIC FOR SUPPORT.
5. FABRIC SHALL BE EMBEDDED 1 FOOT MINIMUM BELOW GROUND AND BACKFILLED. IT SHALL BE SECURELY FASTENED TO THE STAKES AND FRAME.
6. A 2" x 4" WOOD FRAME SHALL BE COMPLETED AROUND THE CREST OF THE FABRIC FOR OVER FLOW STABILITY.

MAXIMUN DRAINAGE AREA 1 ACRE

INLET PROTECTION DETAIL 2

NOT TO SCALE

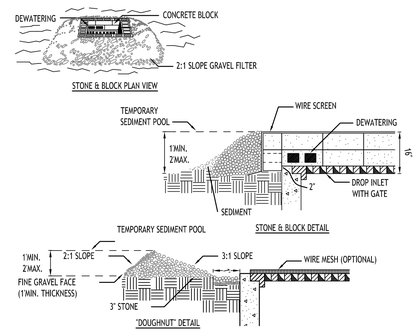

CONSTRUCTION SPECIFICATIONS

1. LAY ONE BLOCK ON EACH SIDE OF THE STRUCTURE ON ITS SIDE FOR DEWATERING. FOUNDATION SHALL BE 2 INCHES MINIMUM BELOW REST OF INLET AND BLOCKS SHALL BE PLACED AGAINST INLET FOR SUPPORT.
2. HARDWARE CLOTH OR 1/2" WIRE MESH SHALL BE PLACED OVER BLOCK OPENINGS TO SUPPORT STONE.
3. USE CLEAN STONE OR GRAVEL 1/2-3/4 INCH IN DIAMETER PLACED 2 INCHES BELOW TOP OF THE BLOCK ON A 2:1 SLOPE OR FLATTER.
4. FOR STONE STRUCTURES ONLY, A 1 FOOT THICK LAYER OF THE FILTER STONE WILL BE PLACED AGAINST THE 3 INCH STONE AS SHOWN ON THE DRAWINGS.

MAXIMUM DRAINAGE AREA 1 ACRE

INLET PROTECTION DETAIL 3

NOT TO SCALE

NOTE: INSTALL ONE OF THE INLET PROTECTION OPTIONS SHOWN PRIOR TO CONSTRUCTION

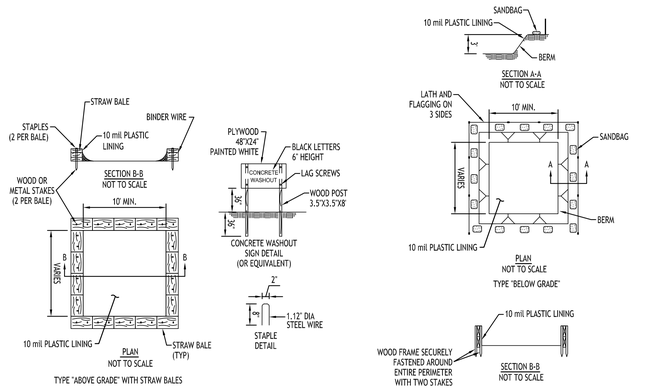

NOTES

1. ACTUAL LAYOUT TO BE DETERMINED IN THE FIELD.
2. A CONCRETE WASHOUT SIGN SHALL BE INSTALLED WITHIN 30' OF THE TEMPORARY CONCRETE WASHOUT FACILITY.
3. MATERIALS USED TO CONSTRUCT TEMPORARY CONCRETE WASHOUT FACILITIES SHALL BE REMOVED FROM THE SITE OF THE WORK AND DISPOSED OF OR RECYCLED.
4. HOLES, DEPRESSIONS OR OTHER GROUND DISTURBANCE CAUSED BY THE REMOVAL OF THE TEMPORARY CONCRETE WASHOUT FACILITIES SHALL BE BACKFILLED, REPAIRED, AND STABILIZED TO PREVENT EROSION.

CONCRETE WASHOUT DETAIL

NOT TO SCALE

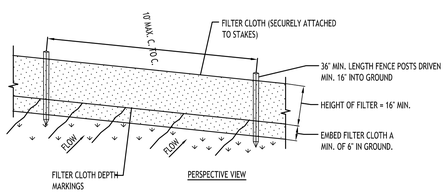

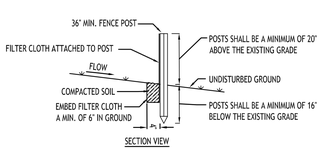

CONSTRUCTION SPECIFICATIONS

1. WOVEN FENCE TO BE FASTENED SECURELY TO FENCE POSTS WITH WIRE TIES OR STAPLES. POSTS SHALL BE STEEL EITHER "T" OR "U" TYPE OR HARDWOOD.
2. WHEN TWO SECTIONS OF FILTER CLOTH ADJOIN EACH OTHER THEY SHALL BE OVER-LAPPED BY SIX INCHES AND FOLDED. FILTER CLOTH SHALL BE EITHER FILTER X, MIRAFI 100X, STABLINKA T140N, OR APPROVED EQUIVALENT.
3. MAINTENANCE SHALL BE PERFORMED AS NEEDED AND MATERIAL REMOVED WHEN "BULGES" DEVELOP IN THE SILT FENCE.

SILT FENCE DETAIL

NOT TO SCALE

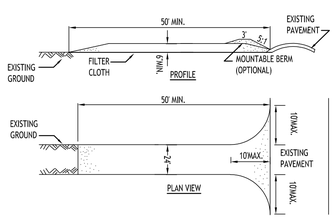

CONSTRUCTION SPECIFICATIONS

1. STONE SIZE - USE 2" STONE, OR RECLAIMED OR RECYCLED CONCRETE EQUIVALENT.
2. LENGTH - NOT LESS THAN 50 FEET (EXCEPT ON A SINGLE RESIDENCE LOT WHERE A 30 FOOT MINIMUM LENGTH WOULD APPLY).
3. THICKNESS - NOT LESS THAN SIX (6) INCHES.
4. WIDTH - TWENTY FOUR FEET PER NYSDOT.
5. FILTER CLOTH - WILL BE PLACED OVER THE ENTIRE AREA PRIOR TO PLACING OF STONE.
6. SURFACE WATER - ALL SURFACE WATER FLOWING OR DIVERTED TOWARD CONSTRUCTION ENTRANCES SHALL BE PIPED ACROSS THE ENTRANCE. IF PIPING IS IMPRACTICAL, A MOUNTABLE BERM WITH 5:1 SLOPES WILL BE PERMITTED.
7. MAINTENANCE - THE ENTRANCE SHALL BE MAINTAINED IN A CONDITION WHICH WILL PREVENT TRACKING OR FLOWING OF SEDIMENT ONTO PUBLIC RIGHTS-OF-WAY, ALL SEDIMENT SPILLED, DROPPED, WASHED OR TRACTED ONTO PUBLIC RIGHTS-OF-WAY MUST BE REMOVED IMMEDIATELY.
8. WHEN WASHING IS REQUIRED, IT SHALL BE DONE ON A AREA STABILIZED WITH STONE AND WHICH DRAINS INTO AN APPROVED SEDIMENT TRAPPING DEVICE.
9. PERIODIC INSPECTION AND NEEDED MAINTENANCE SHALL BE PROVIDED AFTER EACH RAIN.

STABILIZED CONSTRUCTION ENTRANCE DETAIL

NOT TO SCALE

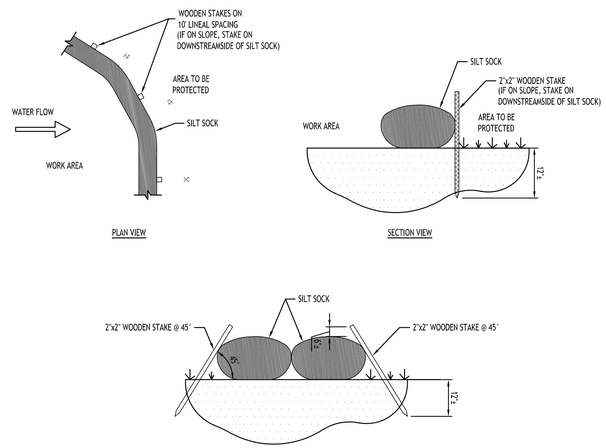

NOTES:

CONTRACTOR SHALL INSPECT AND MAINTAIN SILT SOCK AS NEEDED DURING THE DURATION OF CONSTRUCTION PROJECT.

CONTRACTOR SHALL REMOVE SEDIMENT COLLECTED AT THE BASE OF THE SILT SOCK WHEN IT HAS REACHED $\frac{1}{2}$ OF THE EXPOSED HEIGHT OF THE SILT SOCK. ALTERNATIVELY, RATHER THAN CREATE A SOIL DISTURBING ACTIVITY, THE ENGINEER MAY CALL FOR ADDITIONAL SILT SOCK TO BE ADDED AT AREAS OF HIGH SEDIMENTATION, PLACED IMMEDIATELY ON TOP OF THE EXISTING SEDIMENT LADEN SILT SOCK.

SILT SOCK SHALL BE OVERLAPPED 12" AT JOINTS AND STAKED ON EACH SIDE OF THE SOCK AT A 45° ANGLE

SILT SOCK DETAIL

NOT TO SCALE

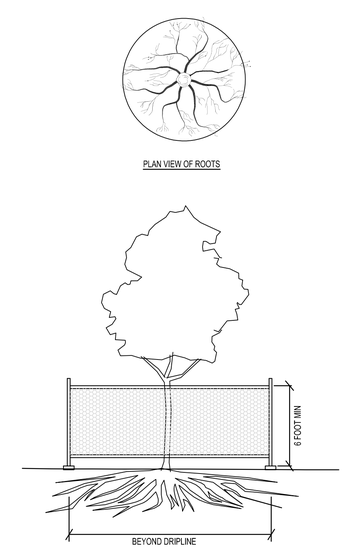

EXISTING TREE PROTECTION FENCE

MATERIALS

MATERIALS FOR TEMPORARY PLASTIC BARRIER FENCES SHALL MEET THE FOLLOWING REQUIREMENTS:

- FENCE: HIGH-DENSITY POLYETHYLENE MESH, ULTRAVIOLET-STABILIZED MIN. 2 YEARS; MINIMUM HEIGHT 4.0 FEET. COLOR: HIGH-VISIBILITY ORANGE OR GREEN. WHEN USED TO PROTECT TREES OR OTHER VEGETATION, COLOR SHALL BE HIGH-VISIBILITY ORANGE.
- POSTS: RIGID METAL OR WOOD POSTS, MINIMUM LENGTH 6.0 FEET.
- TIES: STEEL WIRE, #14 GAUGE OR NYLON CABLE TIES.
- WARNING SIGNS: SHEET METAL, PLASTIC OR OTHER RIGID, WATERPROOF MATERIAL, 1.5 FEET BY 2.0 FEET WITH 4 INCH BLACK LETTERS ON A WHITE BACKGROUND. TEXT SHALL BE: "PROTECTED SITE - KEEP OUT" UNLESS OTHERWISE SPECIFIED.

DETAILS

FENCES SHALL BE ERECTED PRIOR TO MOVING CONSTRUCTION EQUIPMENT ONTO ANY AREA DESIGNATED FOR PROTECTION.

THE LINE OF FENCES SHALL BE STAKED OR MARKED OUT ON THE GROUND BY THE CONTRACTOR AND APPROVED BY THE ENGINEER/OWNER BEFORE ANY FENCE IS INSTALLED. WHERE USED FOR PROTECTION OF INDIVIDUAL TREES, FENCE SHALL BE PLACED AT THE DRIP LINE (EXTENT OF CANOPY). IF NOT POSSIBLE, PLACEMENT SHALL BE AS CLOSE TO THE DRIP LINE AS POSSIBLE AND IN NO CASE LESS THAN 5.0 FEET AWAY FROM THE TREE TRUNK.

ON APPROVAL OF THE STAKEOUT, POSTS SHALL BE SECURELY DRIVEN ON 6.0 FOOT-MAXIMUM CENTERS, NORMAL TO THE GROUND, TO A DEPTH 1/3 OF THE TOTAL POST LENGTH. PLASTIC BARRIER FENCE SHALL BE PLACED ALONG THE SIDE OF ALL POSTS. ENDS OF FENCING SEGMENTS SHALL OVERLAP A DISTANCE OF AT LEAST ONE HALF THE FENCE HEIGHT.

FENCING SHALL BE SECURED TO POSTS WITH WIRE OR CABLE TIES AT TOP, MIDDLE AND BOTTOM OF POST. FASTENER SHALL BE TIGHT ENOUGH TO PREVENT THE FENCING FROM SLIPPING DOWN. OVERLAPS SHALL ALSO BE SECURELY FASTENED.

BARRIER FENCE WHICH IS NOT ORANGE IN COLOR SHALL BE FLAGGED AT 6.0 FOOT INTERVALS WITH RED OR ORANGE FLORESCENT TAPE. WARNING SIGNS SHALL BE MOUNTED ON THE FENCE AT NO MORE THAN 100 FOOT INTERVALS.

MAINTENANCE SHALL COMMENCE IMMEDIATELY AFTER ERECTION OF THE FENCE AND CONTINUE UNTIL ONE WEEK PRIOR TO ACCEPTANCE OF THE CONTRACT, AND SHALL CONSIST OF: REPLACING DAMAGED POST(S) AND FENCING; RE-FASTENING AND TIGHTENING FENCING; AND RESTORING FENCE TO ITS INTENDED HEIGHT.

FENCING USED FOR TREE OR OTHER VEGETATION PROTECTION SHALL NOT BE TEMPORARILY REMOVED TO ALLOW EQUIPMENT ACCESS OVER A PROTECTED AREA, EXCEPT AS REQUIRED FOR ITEMS OF WORK SPECIFICALLY SHOWN ON THE PLANS AND APPROVED BY THE ENGINEER IN WRITING.

TREE PROTECTION DETAIL

NOT TO SCALE

CARMINAWOOD
DESIGN
Buffalo | Utica | Greensboro

Proposed Multi-Family

4774 & 4780 Sheridan Drive
Amherst, NY

REVISIONS:

No.	Description	Date
1	Rev. per DOT comments	11/1/24
2	Rev. per DOT comments	2/3/25

DRAWING NAME:

Demolition & Erosion Control Details

Date: 4/22/24
Drawn By: P. Sheedy
Scale: As Noted

DRAWING NO.

C-002

Project No: 23-4091

Preliminary Plat

SCALE: 1"=30'

PARKING CALCULATION:

"MULTI-FAMILY"
2 SPACES PER UNIT
22 UNITS x 2 = 44 SPACES REQD (9x19')

BUILDING DENSITY REQUIREMENTS:

PER R-4 ZONING REQUIREMENTS

5,850 SF / DWELLING
5.03 AC * 43,560 SF = 219,106 SF / 5,850 SF = 37.5

37 UNITS ALLOWED

Site Data

SITE AREA = 5.03 AC TOTAL
ZONED: R-4
PROPOSED USE: 2-UNIT RESIDENTIAL TOWNHOUSE BUILDINGS WITH ATTACHED GARAGES (22 UNITS TOTAL)

SETBACKS (BLDG)	REQUIRED	PROVIDED
FRONT	30 FT.	37.87 FT. MIN.
SIDE	8 FT. / 20 FT. (COMBINED)	17 FT. MIN. / > 20 FT. (COMBINED)
REAR	30 FT.	30 FT. MIN.
BUILDING DENSITY:	37	22
MIN. FLOOR AREA (2-BDRM):	760 SF	> 760 SF
MAX. BUILDING COVERAGE:	35% (1.76 AC)	1.14 AC (22.7%)
MAX. BUILDING HEIGHT:	30 FT. *	< 30 FT.
PARKING: (9'x19')	44	52 SURFACE = 44 GARAGE SPACES = 96 TOTAL
GREENSPACE		
OVERALL:	1.25 AC (25%)	2.77 AC (55.2%)

*PER TOWN BOARD APPROVAL CONDITION 3

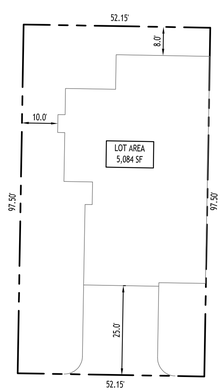

Typical Lot Layout

SCALE: 1"=20'

Site Data

SITE AREA = 5.03 AC TOTAL
ZONED: R-4
PROPOSED USE: 2-UNIT RESIDENTIAL TOWNHOUSE BUILDINGS WITH ATTACHED GARAGES (22 UNITS TOTAL)

LOT SIZING	REQUIRED	PROVIDED
AREA (MIN.)	5,850 SF	5,084 SF *
WIDTH (MIN.)	90 FT. (TWO-FAM.)	52.15' *
YARDS		
FRONT (MIN.)	30 FT.	25.0 FT. *
SIDE (MIN.)	8 FT.	0.0 FT. *
SIDE - COMBINED (MIN.)	20 FT.	10 FT. *
REAR (MIN.)	30 FT.	8.0 FT. *
HEIGHT (MAX.)	35 FT.	17.0 FT.
BUILDING COVERAGE (MAX.)	35% (2,048 SF)	44.4% (2,260 SF) *
FLOOR AREA (MIN.)	760 SF (2-BDRM)	> 760 SF

*VARIANCE REQUIRED

NOTE: BOUNDARY AND TOPOGRAPHIC INFORMATION PROVIDED BY OTHERS, CARMINA WOOD DESIGN ASSUMES NO RESPONSIBILITY FOR ITS ACCURACY.

30 0 30 60FT.
30'

CARMINAWOOD DESIGN
Buffalo | Utica | Greensboro

Proposed Multi-Family

4774 & 4780 Sheridan Drive
Amherst, NY

REVISIONS:

No.	Description	Date
1	Rev. addresses, dim. added	4/17/25

STATE OF NEW YORK · R. CHRISTOPHER WOOD · 076394 · LICENSED PROFESSIONAL ENGINEER

DRAWING NAME:
Preliminary Plat

Date: 3/24/25
Drawn By: P. Sheedy
Scale: As Noted

DRAWING NO.
P-100

Project No: 23-4091

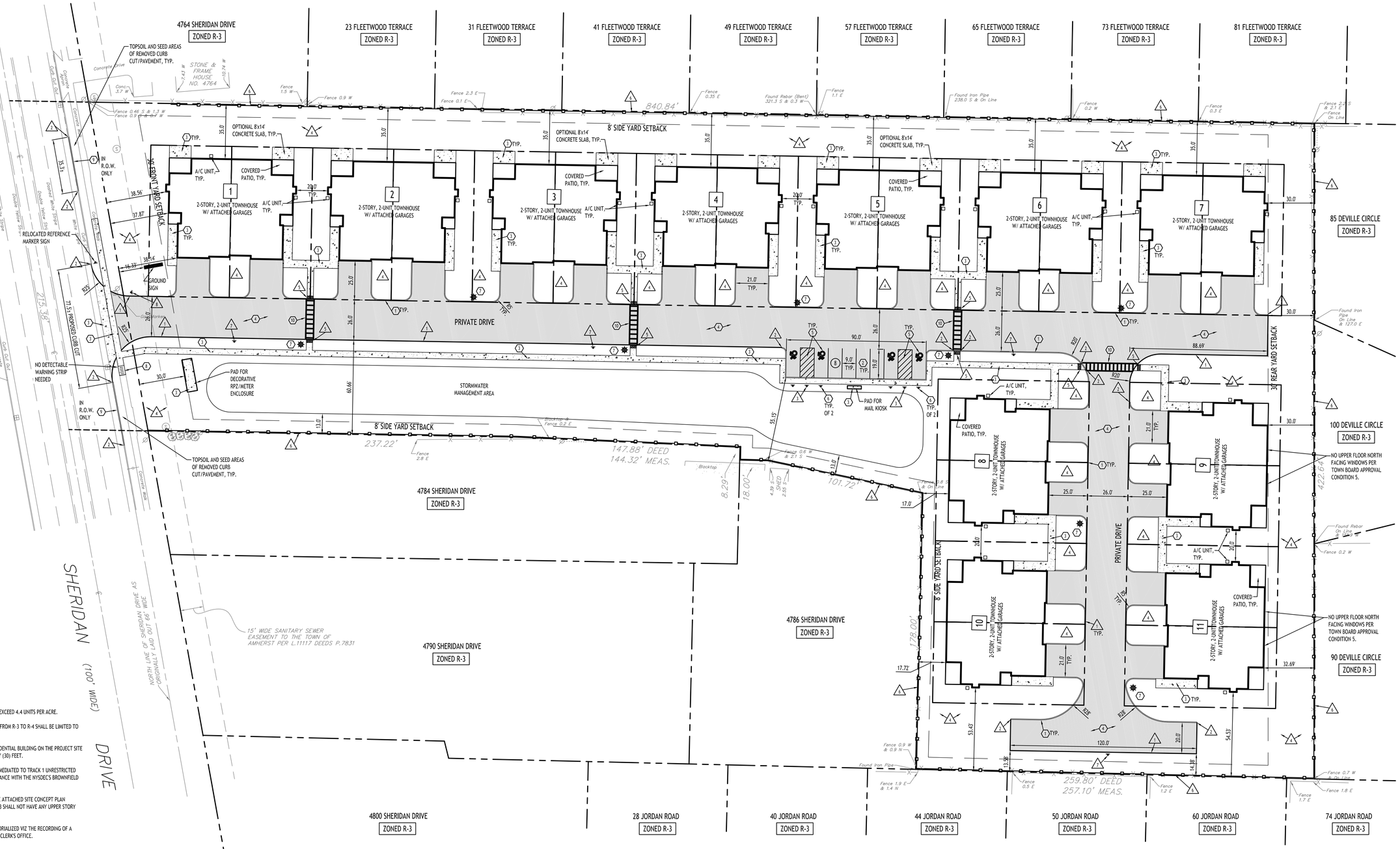

Site Plan

SCALE: 1"=30'

TOWN BOARD APPROVAL CONDITIONS - 2/5/24:

1. THAT THE DENSITY OF THE PROJECT SITE SHALL NOT EXCEED 4.4 UNITS PER ACRE.
2. THAT THE USE OF THE PROJECT SITE TO BE REZONED FROM R-3 TO R-4 SHALL BE LIMITED TO TWO (2) UNIT-ATTACHED TOWNHOMES ONLY.
3. THAT THE MAXIMUM ALLOWABLE HEIGHT OF ANY RESIDENTIAL BUILDING ON THE PROJECT SITE AS MEASURED FROM FINISHED GRADE SHALL BE THIRTY (30) FEET.
4. THAT THE PROJECT SITE'S CONTAMINATED SOIL BE REMEDIATED TO TRACK 1 UNRESTRICTED STANDARDS UNDER THE PURVIEW OF, AND IN ACCORDANCE WITH THE NYSDEC'S BROWNFIELD CLEANUP PROGRAM.
5. THAT PROPOSED BUILDINGS NUMBER 9 AND 11 ON THE ATTACHED SITE CONCEPT PLAN PREPARED BY CARMINA WOOD DESIGN DATED 12/15/23 SHALL NOT HAVE ANY UPPER STORY WINDOWS ALONG THE NORTH FACING WALLS.
6. THAT THE CONDITIONS STATED ABOVE SHALL BE MEMORIALIZED VIZ THE RECORDING OF A DECLARATION OF RESTRICTIONS AT THE ERIE COUNTY CLERK'S OFFICE.

Site Data

SITE AREA = 5.03 AC TOTAL
ZONED: R-4
PROPOSED USE: 2-UNIT RESIDENTIAL TOWNHOUSE BUILDINGS WITH ATTACHED GARAGES (22 UNITS TOTAL)

SETBACKS (BLDG)	REQUIRED	PROVIDED
FRONT	30 FT.	37.87 FT. MIN.
SIDE	8 FT. / 20 FT. (COMBINED)	17 FT. MIN. / > 20 FT. (COMBINED)
REAR	30 FT.	30 FT. MIN.
BUILDING DENSITY:	37	22
MIN. FLOOR AREA (2-BDRM):	760 SF	> 760 SF
MAX. BUILDING COVERAGE:	35% (1.76 AC)	1.14 AC (22.7%)
MAX. BUILDING HEIGHT:	30 FT. *	< 30 FT.
PARKING: (9x19')	44	52 SURFACE + 44 GARAGE SPACES = 96 TOTAL
GREENSPACE		
OVERALL:	1.25 AC (25%)	2.77 AC (55.2%)

*PER TOWN BOARD APPROVAL CONDITION 3

PARKING CALCULATION:

"MULTI-FAMILY"
2 SPACES PER UNIT
22 UNITS x 2 = 44 SPACES REQD (9x19')

BUILDING DENSITY REQUIREMENTS:

PER R-4 ZONING REQUIREMENTS

5,850 SF / DWELLING
5.03 AC * 43,560 SF = 219,106 SF / 5,850 SF = 37.5

37 UNITS ALLOWED

DETAIL LEGEND SEE SITE DETAIL SHEET

1. TYPE 'A' CONCRETE CURBING
2. 90° PARKING STALL
3. CONCRETE SIDEWALK, 5' WIDE UNLESS OTHERWISE NOTED
4. STANDARD DUTY ASPHALT
5. HANDICAP PAVEMENT MARKINGS
6. HANDICAPPED PARKING SIGN
7. LIGHT POLE FOUNDATION
8. SIDEWALK CURB RAMP
9. NYSDOT CONCRETE CURB
10. CROSSWALK STRIPING

NOTE LEGEND

1. EDGE OF PAVEMENT
2. RUNOUT CURB IN 2' OR MATCH EXISTING CURB
3. INSTALL 'NO PARKING' SIGN, M.U.T.C.D. SIGN NO. R7-1C
4. LANDSCAPED AREA - SEE LANDSCAPE PLAN, IF NO PLANTINGS, INSTALL TOPSOIL & SEED
5. DETECTABLE WARNING STRIP
6. 6' HT. ACTIVE YARDS 'DOGWOOD' VINYL FENCE - COLOR CYPRESS, OR APPROVED EQUAL
7. INSTALL 'NO PARKING FIRE LANE' SIGN
8. INSTALL 'STOP' SIGN, M.U.T.C.D. SIGN NO. R1-1

SITE NOTES:

1. ALL RADII SHALL BE 3'-0' UNLESS OTHERWISE NOTED.
2. ALL DISTURBED AREAS: SHALL HAVE 4" MIN. OF TOPSOIL AND SEED.
3. ALL DIMENSIONS FROM PROPERTY LINES SHALL BE MEASURED PERPENDICULAR TO THE PROPERTY LINE.
4. CENTER ENTRANCE SIDEWALKS ON DOOR OPENINGS.
5. BUILDING DIMENSIONS ARE APPROXIMATE, REFER TO ARCHITECTURAL DRAWINGS FOR LAYOUT DIMENSIONS.
6. ALL HANDICAP RAMPS (NOT WITHIN THE NYSDOT R.O.W.) AND/OR SIDEWALKS FLUSH TO PAVEMENT SHALL HAVE ADA COMPLIANT TACTILE WARNING STRIPS WHERE ENTERING PARKING AREAS/DRIVEWAYS. SIDEWALKS FLUSH TO PAVEMENT WITHIN THE NYSDOT R.O.W. SHALL ADHERE TO THE NOTES AND DESIGN REGULATIONS AS STATED ON NYSDOT STANDARD SHEET 608-01.
7. EXISTING TREE LOCATIONS ARE APPROXIMATE, CONTRACTOR TO LOCATE LOCATIONS PRIOR TO CONSTRUCTION AND COORDINATE WITH TOWN LANDSCAPE ARCHITECT WHICH TREES SHALL BE REMOVED AND WHICH SHALL REMAIN AND BE PROTECTED DURING CONSTRUCTION.

GENERAL NOTES:

1. INSTALL ALL MATERIALS TO MANUFACTURER'S RECOMMENDATIONS AND BEST STANDARDS OF TRADE INVOLVED.
2. SUBSTITUTIONS SHALL BE MADE ONLY WITH OWNER'S APPROVAL AND BE OF EQUIVALENT QUALITY TO WHAT IS SPECIFIED.
3. WORK SHALL BE COMPLETED IN STRICT ACCORDANCE WITH ALL LOCAL CODES AND OSHA SAFETY RULES AND REGULATIONS.
4. VERIFY ALL EXISTING CONDITIONS AND DIMENSIONS AT THE SITE. NOTIFY OWNER & ENGINEER OF DISCREPANCIES IN CONDITIONS SHOWN ON DRAWINGS PRIOR TO PROCEEDING WITH THE WORK.
5. CONTRACTOR SHALL BE RESPONSIBLE FOR PROTECTION OF ANY EXISTING STRUCTURES TO REMAIN AND ANY FINISH MATERIAL INSTALLED WHILE WORKING ON OTHER COMPONENTS.
6. CONTRACTOR SHALL KEEP JOB FREE OF DEBRIS AND MAKE FINAL CLEANUP TO SATISFACTION OF OWNER.
7. CONTRACTOR SHALL ASCERTAIN THE LOCATION OF ALL UTILITIES PRIOR TO CONSTRUCTION SO THAT THIS WORK WILL NOT DISTURB EXISTING LINES AND/OR INSTALLATIONS. COORDINATE ALL WORK WITH THE APPLICABLE UTILITY COMPANIES.
8. ALL OTHER PERMITS REQUIRED BY STATE OF NEW YORK, COUNTY OF ERIE, AND TOWN OF CLARENCE ARE THE RESPONSIBILITY OF THE CONTRACTOR/DEVELOPER/OWNER.
9. EXISTING CURB AND REMOVAL OF EXISTING ENTRANCE SHALL BE SAW CUT FULL-DEPTH AND NEATLY REMOVED FROM THE BACKSIDE. EXISTING PAVEMENT SHALL NOT BE DISTURBED AND THE PAVEMENT EDGE SHALL BE USED AS FORM FOR PLACING NEW CURB.

SITE LEGEND

- PROPERTY LINE
- PROPOSED SIDEWALK / CONCRETE PAD
- NUMBER OF PARKING SPACES
- PROPOSED SIGN
- PROPOSED STANDARD DUTY ASPHALT PAVEMENT
- PROPOSED LIGHT POLE

NOTE: BOUNDARY AND TOPOGRAPHIC INFORMATION PROVIDED BY OTHERS, CARMINA WOOD DESIGN ASSUMES NO RESPONSIBILITY FOR ITS ACCURACY.

30' 0 30 60Ft.

CARMINA WOOD DESIGN
Buffalo | Utica | Greensboro

Proposed Multi-Family

4774 & 4780 Sheridan Drive
Amherst, NY

REVISIONS:

No.	Description	Date
1	Rev. per Town comments	6/3/24
2	Rev. per Town comments	6/20/24
3	Rev. per DOT comments	11/1/24
4	Rev. per DOT comments	11/13/24
5	Rev. per DOT comments	2/3/25
6	Rev. per Town comments	2/20/25
7	Rev. per NYSDOT comments	3/5/25
8	Rev. per Town comments	4/25/25

STATE OF NEW YORK
R. CHRISTOPHER WOOD
LICENSED PROFESSIONAL ENGINEER
075394

DRAWING NAME:
Site Plan

Date: 4/22/24
Drawn By: P. Sheedy
Scale: As Noted

DRAWING NO.
C-100

Project No: 23-4091

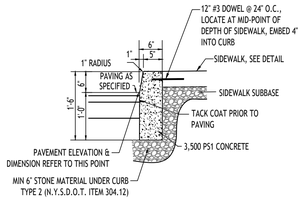

ABUTTING SIDEWALK

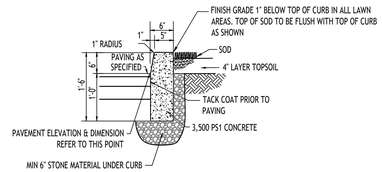

ABUTTING LANDSCAPE/GRASS

NOTES:
1. CONTROL JOINTS TO BE 2" DEEP AT 15'-0" O.C. - SEE SPECIFICATIONS FOR FURTHER JOINT REQUIREMENTS NYSDOT 702-0700.
2. WHERE THE CURB DROPS (IS FLUSH WITH ASPHALT) THE DEPTH OF CURB BELOW GRADE SHALL BE INCREASED TO 1'-6" AND OTHER DIMENSIONS ADJUSTED ACCORDINGLY.

TYPE "A" CONCRETE CURB - 1

NOT TO SCALE

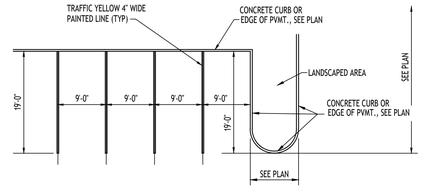

90° PARKING STALL LAYOUT - 2

NOT TO SCALE

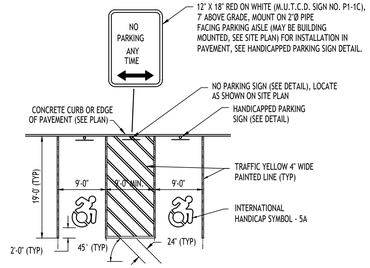

HANDICAPPED PAVEMENT MARKINGS & SIGNAGE - 5

NOT TO SCALE

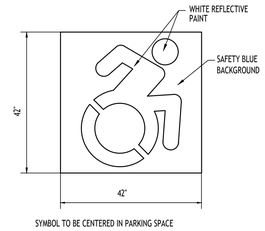

INTERNATIONAL HANDICAP SYMBOL - 5A

NOT TO SCALE

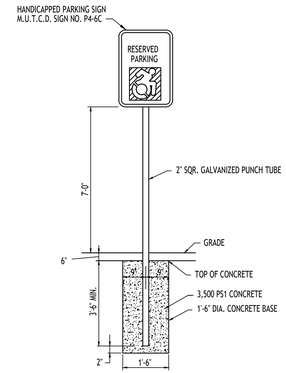

NOTES:
1. HANDICAPPED PARKING SIGN SHALL CONFORM WITH CURRENT STATE AND LOCAL CODES AND REGULATIONS.

GRASS/LAWN AREA

HANDICAPPED PARKING SIGN - 6

NOT TO SCALE

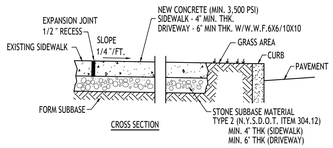

CROSS SECTION

NOTES:
1. CONTROL JOINTS TO BE AT 5'-0" O.C., BOTH WAYS WHERE APPLICABLE. SEE SPECIFICATIONS FOR FURTHER JOINT REQUIREMENTS NYSDOT 702-0700.
2. CONCRETE SIDEWALK AND DRIVEWAY MATERIAL SHALL CONFORM TO NYSDOT STANDARD SPECIFICATION 501 AND CONSTRUCTION METHODS SHALL CONFORM TO NYSDOT STANDARD SPECIFICATION 608-3.
3. SUBBASE GRADE SHALL FOLLOW THE PROPOSED GRADE OF THE SIDEWALK AND SLOPE AWAY FROM BUILDING WHERE APPLICABLE, PROVIDE CONTINUOUS STONE PATH TO CURB UNDERDRAIN WHERE PROVIDED.
4. FULL DEPTH EXPANSION JOINTS SHALL BE INSTALLED EVERY 20' O.C., BOTHWAYS WHERE APPLICABLE. SEE SPECIFICATIONS FOR FURTHER JOINT REQUIREMENTS NYSDOT 702-0700.
5. SEE CURB DETAIL FOR DOWLING REQUIREMENTS WHERE ABUTTING CURB.
6. INSTALL 6" LONG #3 DOWELS @ 12" O.C. WHERE SIDEWALK ABUTS A BUILDING WALL AT AN ENTRANCE, THICKEN SIDEWALK TO 6" AT BUILDING WALL AND INSTALL DOWEL CENTERED IN THE 6" DEPTH. DOWELS AND THICKENING OF SIDEWALK SHALL EXTEND 18" EITHER SIDE OF ENTRANCE.
7. INSTALL 1/2" PREMOLDED EXPANSION JOINT WITH BACKER ROD & SEALANT WHERE SIDEWALK ABUTS BUILDING OR OTHER STRUCTURE.

CONCRETE SIDEWALK - 3

NOT TO SCALE

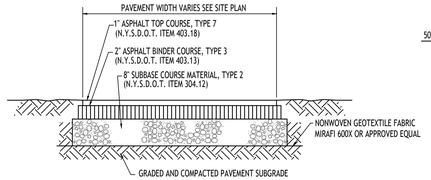

NOTE: CONSTRUCTION METHODS FOR ASPHALT PAVEMENT SHALL CONFORM TO NYSDOT STANDARD SPECIFICATION 401-3, WITH SUBBASE CONSTRUCTION METHODS CONFORMING TO NYSDOT STANDARD SPECIFICATION 304-3.

STANDARD DUTY ASPHALT SECTION - 4

NOT TO SCALE

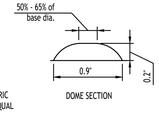

DOME SECTION

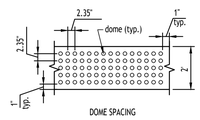

DOME SPACING

NOTE: TACTILE WARNING DEVICES SHALL BE PER ICC/ANSI A117.1-1998, SECTION 705.3.1.2 OR CURRENT UPDATE

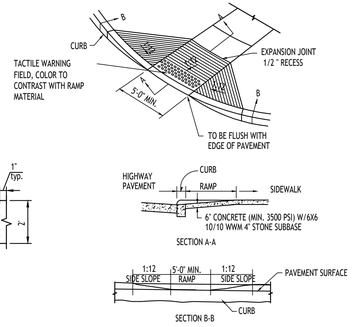

SIDEWALK CURB RAMP - 8

NOT TO SCALE

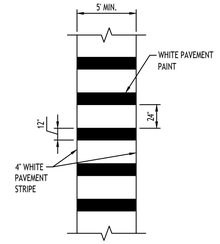

CROSSWALK STRIPING - 10

NOT TO SCALE

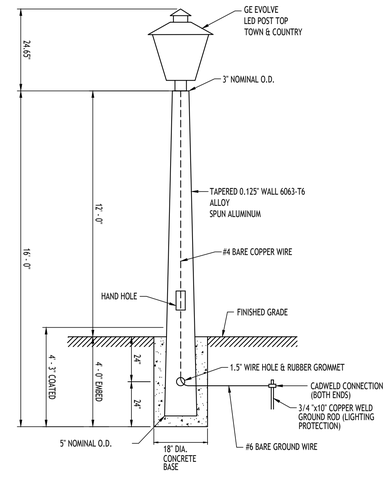

NOTES:
1. LIGHT FIXTURE, POLE & BASE ORDERING INFORMATION, VERIFY WITH OWNER & UTILITY COMPANY PRIOR TO ORDERING.

POST TOP LIGHT POLE & FOUNDATION - 7

NOT TO SCALE

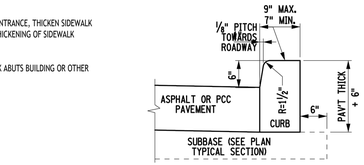

TYPE VF6
(VERTICAL FACED CURB WITHOUT CURB ANCHOR)
(SEE NOTE 4)

NYSDOT CONCRETE CURB - 9

NOT TO SCALE

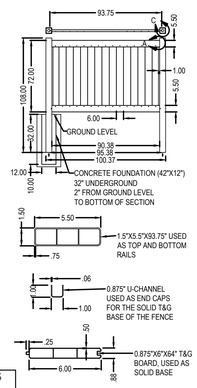

NOTE: BASIS OF DESIGN IS ILLUSIONS VINYL FENCE V-300, OR APPROVED EQUAL. COLOR TO BE NEUTRAL WITH WOOD GRAIN LOOK.

VINYL FENCE DETAIL

NOT TO SCALE

HIGHWAY WORK PERMITS
EXCAVATION/RESTORATION DETAIL WITHIN NYS RIGHT-OF-WAY
OUTSIDE OF PAVEMENT AND SHOULDER
(N.T.S.)

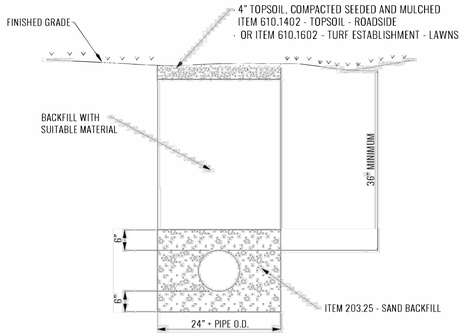

NOTES:
1) BACKFILL OF SUITABLE MATERIAL SHALL BE COMPACTED IN MAXIMUM 6" LIFTS.
2) ALL DISTURBED AREAS SHALL BE MULCHED OR HAVE TURF ESTABLISHED WITHIN 10 DAYS.
3) ALL WORK SHALL CONFORM TO NYSDOT SPECIFICATIONS.

STATE OF NEW YORK
DEPARTMENT OF TRANSPORTATION
04/07/21 | REGION 5

DATE/TIME = 07-APR-2016 8PM07
USER = zxterko

HIGHWAY WORK PERMITS
SIDEWALK WITHIN NYS RIGHT-OF-WAY
(N.T.S.)

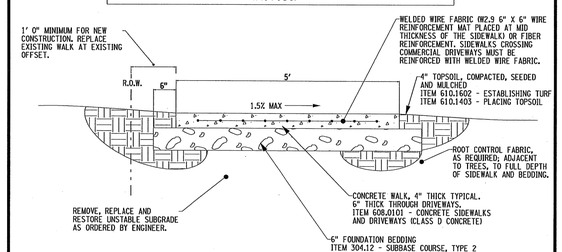

CROSS-SECTIONAL VIEW

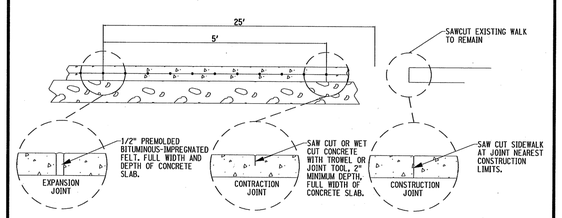

PROFILE VIEW

NOTES:
1) THE GRAVEL OR STONE BASE SHALL BE PLACED ON A WELL GRADED AND COMPACTED SUBGRADE. THE GRAVEL OR STONE BASE SHALL BE THOROUGHLY COMPACTED.
2) ALL EXPOSED SURFACES SHALL BE BROOMED AND EDGES FINISHED WITH A 1/4" RADIUS EDGING TOOL. THE FINISHED CONCRETE SURFACE SHALL BE TREATED WITH A CLEAR, NON YELLOWING CURING COMPOUND.
3) NO CONCRETE SHALL BE PLACED BEFORE APRIL 20TH, OR AFTER OCTOBER 31ST. NO CONCRETE SHALL BE PLACED UNLESS THE AMBIENT AIR AND BASE MATERIAL SURFACE TEMPERATURE IS ABOVE 40 DEGREES.
4) ALL WORK SHALL CONFORM TO NYSDOT SPECIFICATIONS.
5) ALL WORK SHALL CONFORM TO ADA REQUIREMENTS.
6) CONTACT NYSDOT ENGINEER IF PROPOSED SIDEWALK IS LESS THAN 5' WIDE.
7) RUNNING SLOPE/GRADE WHERE HWY GRADE IS 5% OR LESS: 4.5%
RUNNING SLOPE/GRADE WHERE HWY GRADE IS 5% OR MORE: HWY EDGE OF PVMT GRADE IS MAX

STATE OF NEW YORK
DEPARTMENT OF TRANSPORTATION
4/7/16 | REGION

CARMINAWOOD
DESIGN
Buffalo | Utica | Greensboro

Proposed Multi-Family

4774 & 4780 Sheridan Drive
Amherst, NY

REVISIONS:

No.	Description	Date
1	Rev. per Town comments	6/3/24
2	Rev. per Town comments	6/20/24
3	Rev. per DOT comments	11/1/24

DRAWING NAME:
Site Details

Date: 4/22/24
Drawn By: P. Sheedy
Scale: As Noted

DRAWING NO.
C-101

Project No: 23-4091

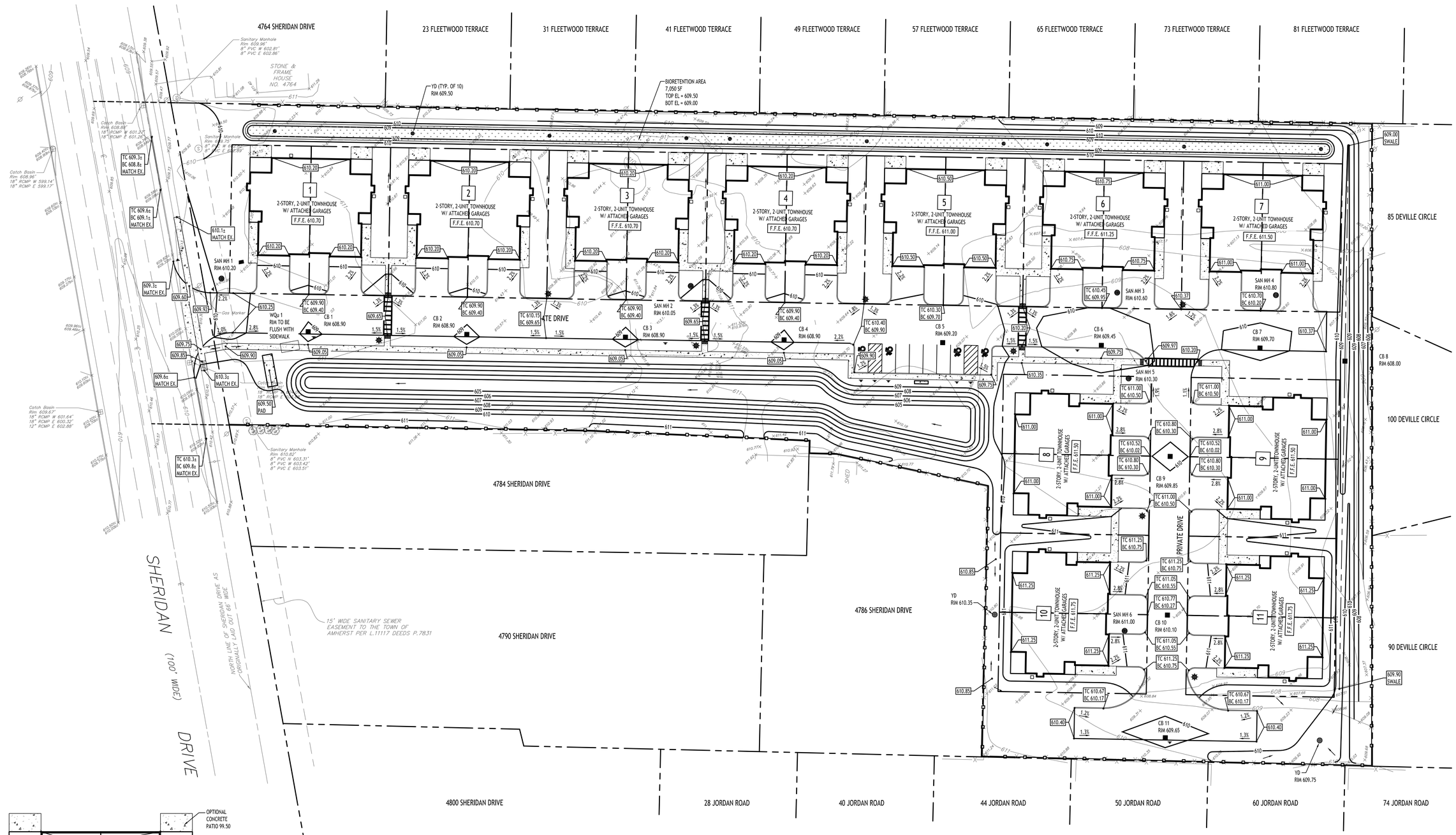

Grading Plan

SCALE: 1"=30'

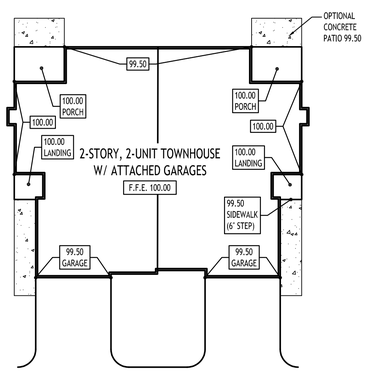

Typical Grading Plan

SCALE: 1"=20'

PROPOSED GRADING LEGEND

PROPOSED CONTOUR	101
PROPOSED SPOT ELEVATION	100.00
PROPOSED TOP/BOTTOM OF CURB	TC 100.50 BC 100.00
PROPOSED CATCH BASIN	CB
PAVEMENT/GROUND SLOPE	
PROPOSED MANHOLE	MH
PROPOSED SWALE	

NOTE: BOUNDARY AND TOPOGRAPHIC INFORMATION PROVIDED BY OTHERS, CARMINA WOOD DESIGN ASSUMES NO RESPONSIBILITY FOR ITS ACCURACY.

30' 30 0 30 60Ft.

CARMINA WOOD DESIGN

Buffalo | Utica | Greensboro

Proposed Multi-Family

4774 & 4780 Sheridan Drive
Amherst, NY

REVISIONS:

No.	Description	Date
1	Rev. per Town comments	6/3/24
2	Rev. per Town comments	6/12/24
3	Rev. per DOT comments	11/1/24
4	Rev. per Town comments	11/13/24
5	Rev. per DOT comments	2/3/25
6	Rev. per Town comments	2/20/25

STATE OF NEW YORK
N. CHRISTOPHER WOOD
076394
LICENSED PROFESSIONAL ENGINEER

DRAWING NAME:

Grading Plan

Date: 4/22/24
Drawn By: P. Sheedy
Scale: As Noted

DRAWING NO.

C-200

Project No: 23-4091

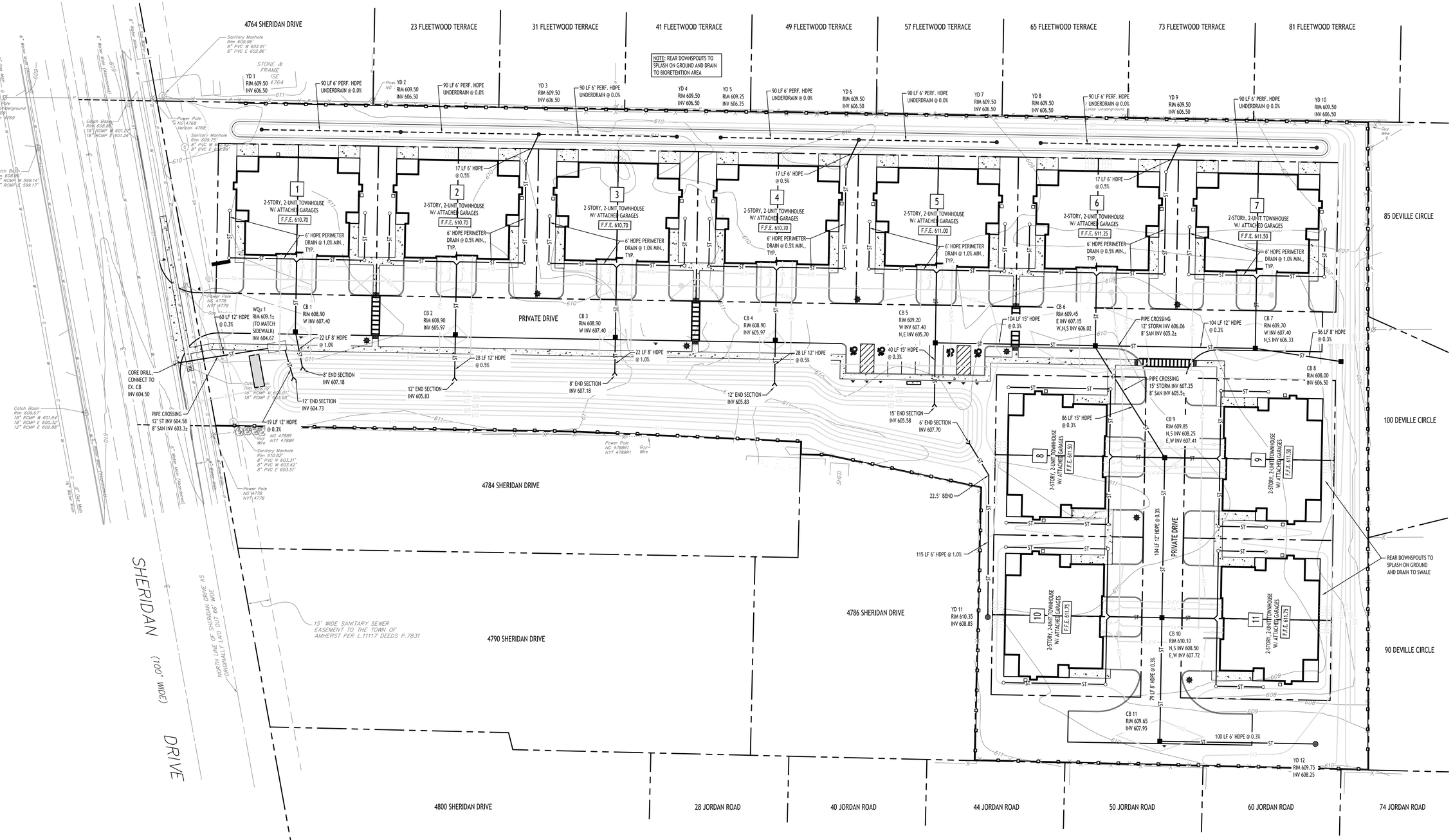

Storm Drainage Plan

SCALE: 1"=30'

PROPOSED STORM DRAINAGE LEGEND

PROPOSED STORM PIPE	ST
PROPOSED PERFORATED STORM PIPE	
PROPOSED CATCH BASIN	■
PROPOSED MANHOLE	●
PROPOSED CLEANOUT	○

CB: CATCH BASIN
MH: MANHOLE
OS: OUTLET STRUCTURE

NOTE: BOUNDARY AND TOPOGRAPHIC INFORMATION PROVIDED BY OTHERS, CARMINA WOOD DESIGN ASSUMES NO RESPONSIBILITY FOR ITS ACCURACY.

30' 30 0 30 60Ft.

CARMINA WOOD DESIGN
Buffalo | Utica | Greensboro

Proposed Multi-Family

4774 & 4780 Sheridan Drive
Amherst, NY

REVISIONS:

No.	Description	Date
1	Rev. per Town comments	6/12/24
2	Rev. per DOT comments	11/1/24
3	Rev. per DOT comments	11/13/24
4	Rev. per Town comments	2/20/25

STATE OF NEW YORK · R. CHRISTOPHER ROOT · 070394 · LICENSED PROFESSIONAL ENGINEER

DRAWING NAME:
Storm Drainage Plan

Date: 4/22/24
Drawn By: P. Sheedy
Scale: As Noted

DRAWING NO.
C-300

Project No: 23-4091

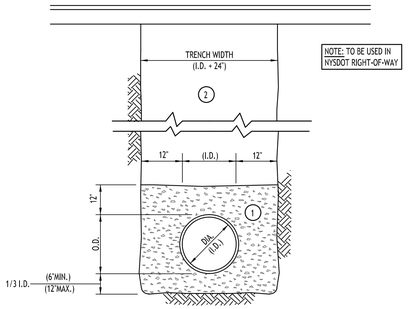

NOTES:

A. PIPE INSTALLATION SHALL BE IN ACCORDANCE WITH MANUFACTURERS RECOMMENDATIONS.

B. TRENCHING OPERATIONS SHALL INCLUDE ALL NECESSARY DEWATERING.

C. TRENCH DETAILS ARE ONLY SHOWN FOR PURPOSES OF MATERIAL PLACEMENT AND MAXIMUM PAY LIMITS.

D. AN OSHA APPROVED MOVABLE PROTECTIVE TRENCH SHIELD SHALL BE USED IN ALL UNSHEETED TRENCH AREAS.

MATERIALS

PIPE BEDDING MATERIAL (NYSDOT 1985 EDITION)

(1) NO. 1 CRUSHED STONE OR CRUSHED GRAVEL WITH A GRADATION CONFORMING WITH NYSDOT SECTION 703-02. THE MATERIAL SHALL BE WELL GRADED WITH NO PARTICLES LARGER THAN ONE INCH AND HAVING A MAXIMUM GRADATION MEETING THE LIMITS DESCRIBED IN THE SPECIFICATIONS. THE BEDDING SHALL BE COMPACTED IN 6" LIFTS WITH EQUIPMENT ACCEPTABLE TO THE PIPE MANUFACTURER.

NO SLAG SHALL BE ALLOWED FOR MATERIAL (1)

(2) TYPE 2 CRUSHED STONE OR CRUSHED GRAVEL WITH A GRADATION CONFORMING WITH NYSDOT SECTION 304-2.02 TYPE 2. THE MATERIAL SHALL BE WELL GRADED WITH NO PARTICLES LARGER THAN TWO INCHES AND HAVING A MAXIMUM GRADATION MEETING THE LIMITS DESCRIBED IN THE SPECIFICATIONS. THE BEDDING SHALL BE COMPACTED IN 6" LIFTS WITH EQUIPMENT ACCEPTABLE TO THE PIPE MANUFACTURER.

NO SLAG SHALL BE ALLOWED FOR MATERIAL (2)

STORM SEWER TRENCH SECTION IN PAVED AREAS

NOT TO SCALE

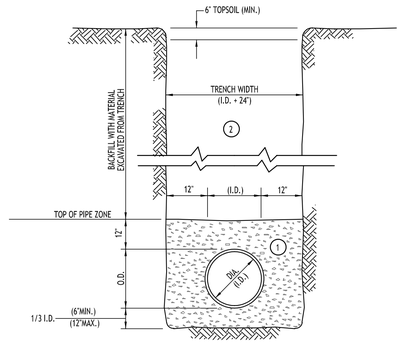

NOTES:

A. PIPE INSTALLATION SHALL BE IN ACCORDANCE WITH MANUFACTURERS RECOMMENDATIONS.

B. TRENCHING OPERATIONS SHALL INCLUDE ALL NECESSARY DEWATERING.

C. TRENCH DETAILS ARE ONLY SHOWN FOR PURPOSES OF MATERIAL PLACEMENT AND MAXIMUM PAY LIMITS.

D. AN OSHA APPROVED MOVABLE PROTECTIVE TRENCH SHIELD SHALL BE USED IN ALL UNSHEETED TRENCH AREAS.

MATERIALS

PIPE BEDDING MATERIAL (NYSDOT 1985 EDITION)

(1) NO. 1 CRUSHED STONE OR CRUSHED GRAVEL WITH A GRADATION CONFORMING WITH NYSDOT SECTION 703-02. THE MATERIAL SHALL BE WELL GRADED WITH NO PARTICLES LARGER THAN ONE INCH AND HAVING A MAXIMUM GRADATION MEETING THE LIMITS DESCRIBED IN THE SPECIFICATIONS. THE BEDDING SHALL BE COMPACTED IN 6" LIFTS WITH EQUIPMENT ACCEPTABLE TO THE PIPE MANUFACTURER.

NO SLAG SHALL BE ALLOWED FOR MATERIAL (1)

(2) BACKFILL MATERIAL SHALL BE NATIVE SOIL CONTAINING NO UNSUITABLE MATERIAL COMPACTED IN 6" LIFTS.

STORM SEWER TRENCH SECTION IN UNPAVED AREAS

NOT TO SCALE

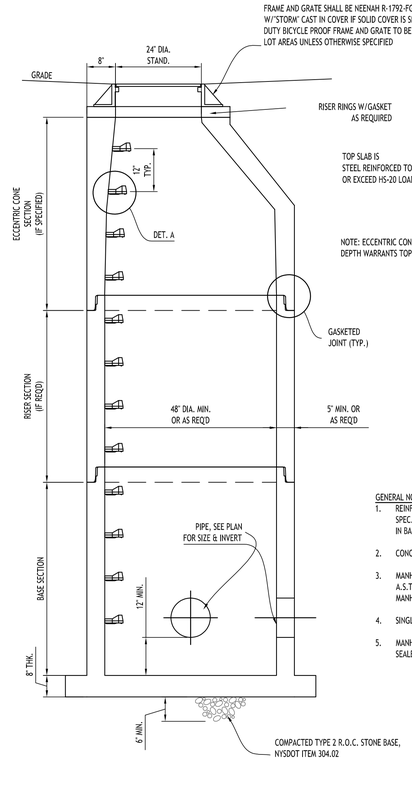

TYPICAL STORM MANHOLE DETAIL

NOT TO SCALE

GENERAL NOTES:

1. REINFORCED STEEL TO CONFORM TO LATEST A.S.T.M. A185 SPEC. 0.12 SQ. IN./LINEAL FT. AND 0.12 SQ. IN. (BOTH WAYS) IN BASE SLAB.
2. CONCRETE COMPRESSIVE STRENGTH - 4000 PSI MINIMUM.
3. MANHOLE DESIGN SPECIFICATIONS TO CONFORM TO LATEST A.S.T.M. C478 SPEC. FOR PRE-CAST REINFORCED CON-CRETE MANHOLE SECTIONS.
4. SINGLE POUR MONOLITHIC BASE SECTION.
5. MANHOLE TO BE COATED ON OUTSIDE WITH BITUMASTIC SEALER.

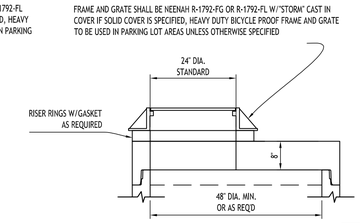

ALTERNATE TOP SLAB

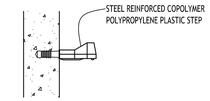

DETAIL A

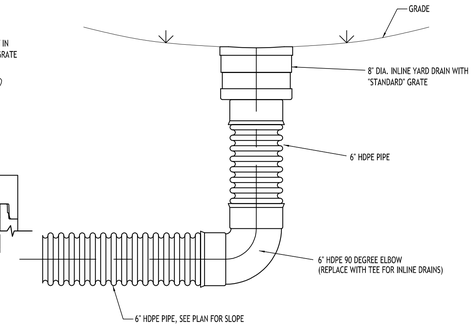

NOTE:
SEE TYPICAL TRENCH SECTION FOR BEDDING REQUIREMENTS

TYPICAL YARD DRAIN DETAIL

NOT TO SCALE

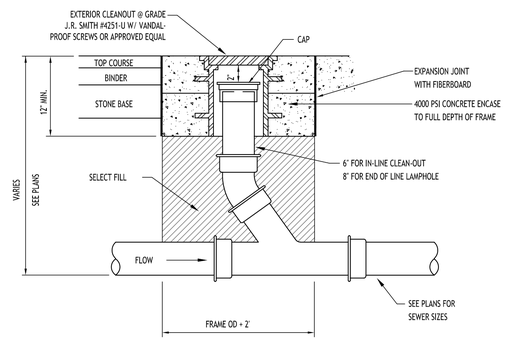

LAMPHOLE/CLEANOUT IN PAVEMENT/SIDEWALK

NOT TO SCALE

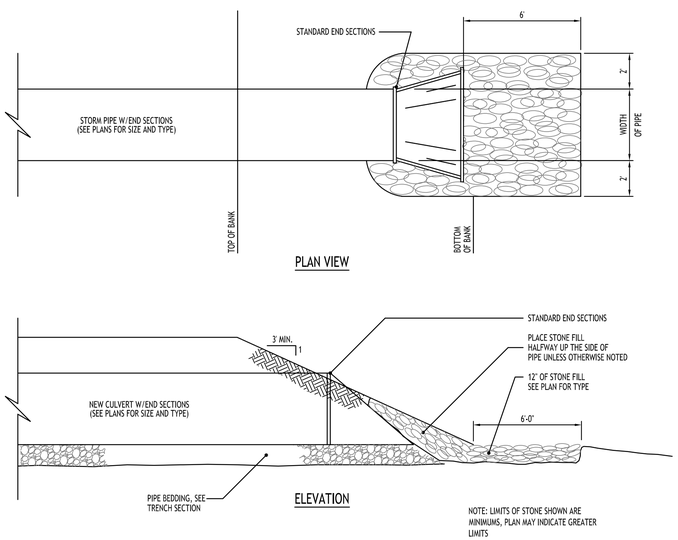

TYPICAL PIPE OUTLET W/ END SECTION & RIP RAP

NOT TO SCALE

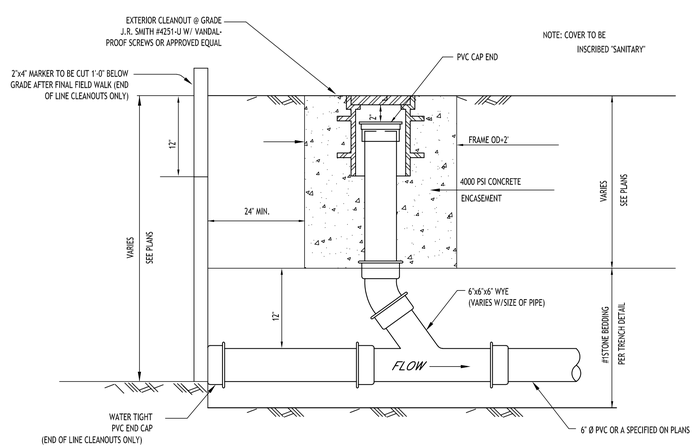

LAMPHOLE/CLEANOUT IN LAWN/FIELD AREAS

NOT TO SCALE

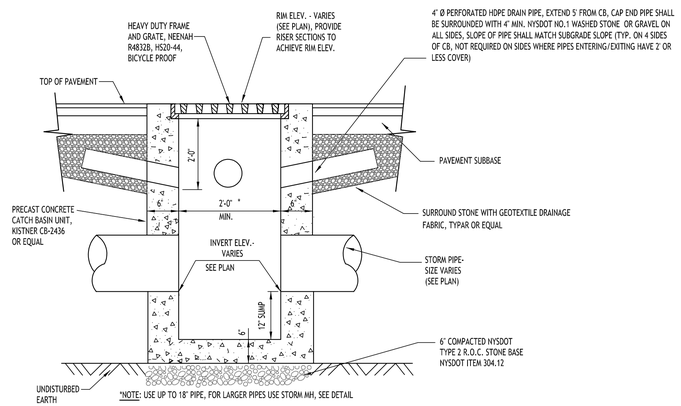

TYPICAL PRECAST CATCH BASIN

NOT TO SCALE

CARMINAWOOD DESIGN
Buffalo | Utica | Greensboro

Proposed Multi-Family

4774 & 4780 Sheridan Drive
Amherst, NY

REVISIONS:

No.	Description	Date
1	Rev. per DOT comments	11/1/24

DRAWING NAME:
Storm Drainage Details

Date: 4/22/24
Drawn By: P. Sheedy
Scale: As Noted

DRAWING NO.
C-301

Project No: 23-4091

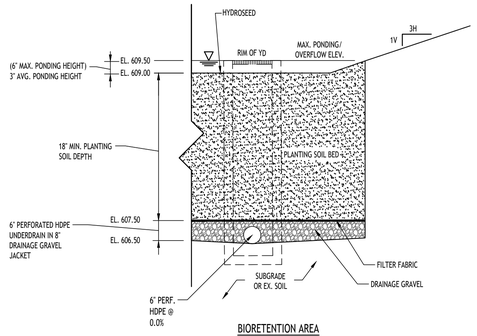

BIORETENTION AREA

BIORETENTION AREA - TYPICAL SECTION

NOT TO SCALE

NOTES:
1. FILTER FABRIC TO BE NON-WOVEN CLASS 'C', MIRAFI 180-N OR APPROVED EQUIVALENT
2. DRAINAGE GRAVEL TO MEET AASHTO M-43, NO.67, SIZE 0.25" TO 0.75"
3. CONTRACTOR TO PROVIDE PLANTING SOIL SUBMITTAL SPECIFICATION FOR REVIEW AND APPROVAL PRIOR TO CONSTRUCTION.

NOTE: PLANTING SOIL SHALL BE LOAM/SAND MIX CONTAINING A MINIMUM OF 35 TO 60% SAND BY VOLUME AND LESS THAN 25% CLAY. SOIL SHOULD FALL WITHIN USCS TYPES SM OR ML WITH PERMEABILITY OF AT LEAST 0.5 FEET PER DAY. SOIL SHOULD BE FREE FROM STONES, STUMPS, ROOTS OR OTHER WOODY MATERIAL OVER 1" IN DIAMETER. PLACEMENT OF THE PLANTING SOIL SHOULD BE IN LIFTS OF 12" TO 18", LOOSELY COMPACTED.

CHARACTERISTICS SHALL BE:
PH RANGE: 5.2 - 7.00
ORGANIC MATTER: 1.5 - 4.0%
MAGNESIUM: 35 LBS PER ACRE MIN.
PHOSPHORUS: 75 LBS PER ACRE MIN.
POTASSIUM: 85 LBS PER ACRE MIN.
SOLUBLE SALTS: 500 PPM
CLAY: 10 TO 25%
SILT: 30 TO 55%
SAND: 35 TO 60%

bio-retention area seeding spec (Northeast Wetland Grass Seed Mix):

Seed Mixture	Variety	Percent by No. of Seeds
Creeping Bentgrass	Agrostis stolonifera	63.0
Rough Bluegrass	Poa trivialis	17.0
Meadow Foxtail	Alopecurus arundinaceus	11.0
Annual Ryegrass	Lolium multiflorum	4.5
Deertongue	Panicum clandestinum	4.5

ENVIRONMENT21 STORMPRO V WATER QUALITY TREATMENT SYSTEM

DATE: 04/25/2018
DWG. NO.:Detail - STORMPRO V

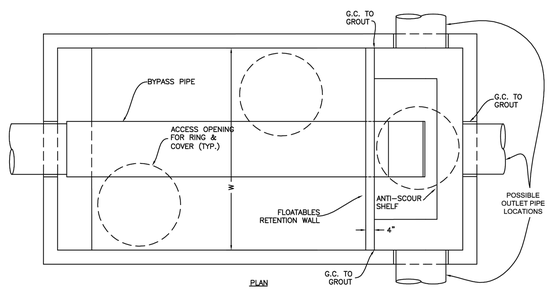

PLAN

ENV21 STORMPRO SIZING TABLE				
STORMPRO MODEL NUMBER	W (ft.)	L (ft.)	S (ft.)	NJDEP MTFR (cfs)
V37	3	7	1.5+	0.85
V48	4	8	2.0+	1.29
V510	5	10	2.5+	2.02
V612	6	12	3.0+	2.91
V714	7	14	3.5+	3.96
V816	8	16	4.0+	5.17
V1020	10	20	5.0+	8.08
V1224	12	24	6.0+	11.61

SITE SPECIFIC DATA REQUIREMENTS	
STRUCTURE ID:	
SITE WQFR (cfs)	
DESIGN STORM (yrs.)	
PEAK FLOW (cfs)	
RIM ELEVATION (ft.)	
INLET PIPE SIZE (in.)	
INLET PIPE ELEV. (ft.)	
OUTLET PIPE SIZE (in.)	
OUTLET PIPE ELEV. (ft.)	

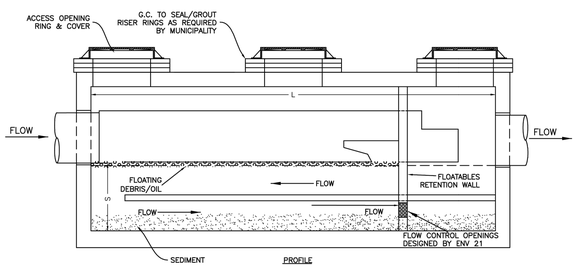

PROFILE

NOTES:
1. MAXIMUM OPERATING LOSS APPROXIMATELY 0.5 FT.
2. DESIGN SPECIFICATIONS CONFORM TO LATEST A.S.T.M. C478
3. DESIGN LOADING: AASHTO HS20-44.
4. DESIGN OF FLOATABLES RETENTION WALL BASED ON ENVIRONMENT 21 ANALYSIS OF SITE-SPECIFIC STORM SEWER HYDRAULICS.

DESIGN LOADING: AASHTO HS20-44

PROPRIETARY INFORMATION: PATENTS PENDING - ALL RIGHTS TO ENVIRONMENT 21, LLC.

environment 21 Water Stormwater Solutions

PROJECT:
DRAWN BY:
DATE:
CK'D BY:
SCALE:

Formulas:

$$WQv = \frac{(P)(R_v)(A)}{12}$$

$R_v = (0.05+0.009(I)$

$CN = 1000/[10+5P+10Qa-10(Qa^2+1.25QaP)^{1/2}]$

$Qwq = (q_u)*(A)*(Qa)$

Structure:

P	1.00	in.	rainfall intensity (in.)
A	5.03	ac	project size (ac)
I	44.80	%	impervious area (%)
t_c	44.60	min.	time of concentration (min.)
t_c	0.743	hr.	time of concentration (hr.)
R_v	0.453		runoff coefficient
90% WQv	0.190	ac-ft	Water Quality Volume (ac-ft)
90% WQv	8274.93	ft^3	Water Quality Volume (ft^3)
S	1.364	in.	potential max. retention after runoff begins
Qa	0.253	in.	
CN	88		curve number
I_a	0.273		initial abstraction
I_a/P	0.273		
qu	1000	(csm/in)	unit peak discharge (csm/in.)
A	0.00786	$miles^2$	area drainage (mi^2)
Qwq	1.99	cfs	

NOTE: CALCULATIONS TO BE VERIFIED BY MANUFACTURER, SUBMIT SITE SPECIFIC SHOP DRAWING TO ENGINEER FOR REVIEW PRIOR TO ORDERING.

CARMINAWOOD
DESIGN
Buffalo | Utica | Greensboro

Proposed Multi-Family

4774 & 4780 Sheridan Drive
Amherst, NY

REVISIONS:

No.	Description	Date
1	Rev. per Town comments	6/12/24
2	Rev. per Town comments	11/13/24
3	Rev. per Town comments	3/5/25

STATE OF NEW YORK
R. CHRISTOPHER WOOD
LICENSED PROFESSIONAL ENGINEER
070390

DRAWING NAME:
Storm Drainage Details

Date: 4/22/24
Drawn By: P. Sheedy
Scale: As Noted

DRAWING NO.
C-302

Project No: 23-4091

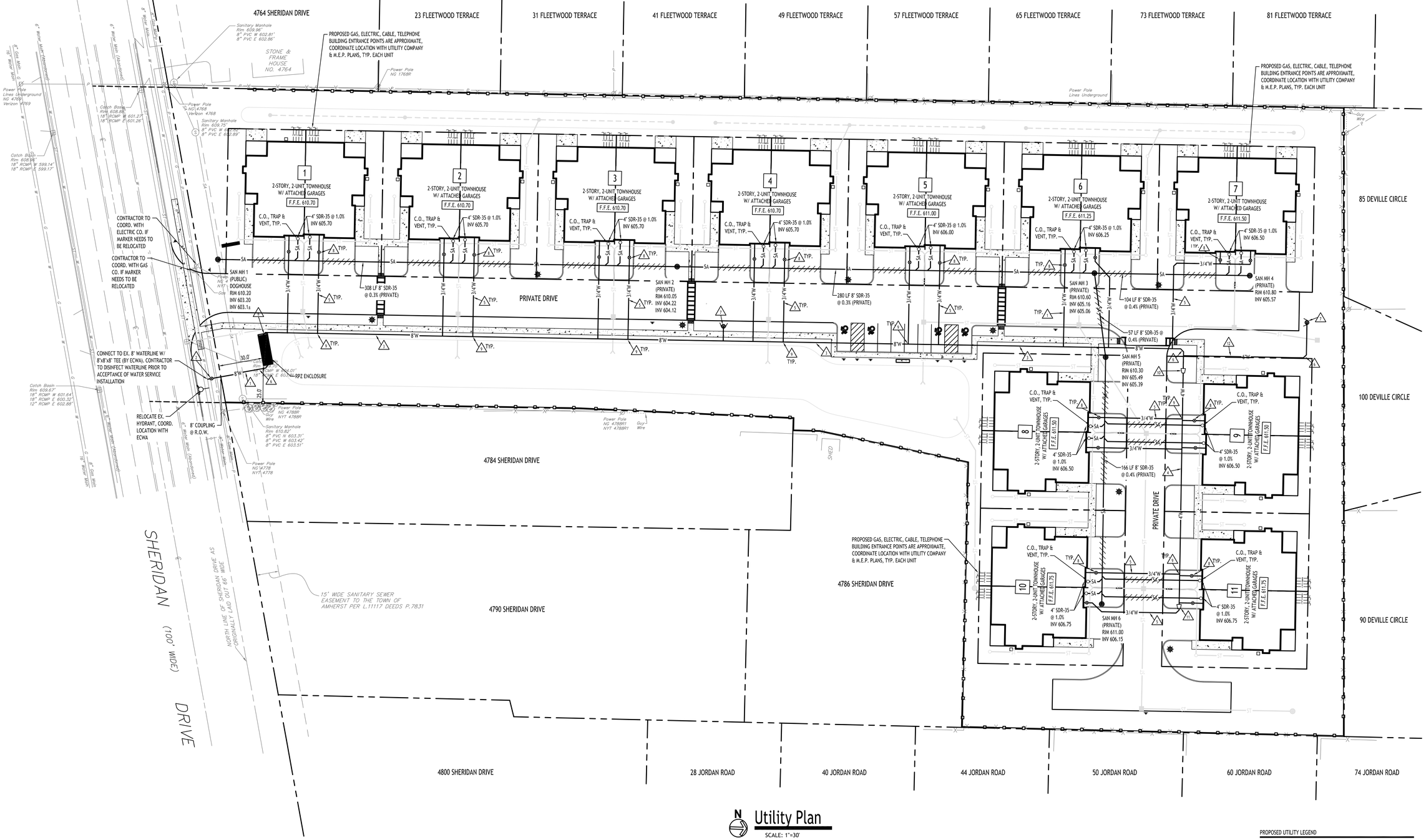

Utility Plan

SCALE: 1"=30'

WATER NOTE LEGEND

1. 8" CLASS 52 DUCTILE IRON
2. 8" VALVE AND BOX
3. 8" AWWA C-900 PVC COMBINED SERVICE
4. 4" AWWA C-900 PVC DOMESTIC SERVICE
5. 3/4" TYPE 'K' COPPER DOMESTIC SERVICE
6. PROVIDE BENDS AND BLOCKING AS NECESARY
7. HYDRANT ASSEMBLY
8. 3/4" VALVE AND BOX
9. 3/4" CORP. STOP
10. 8"x4" REDUCER
11. 4"x3/4" REDUCER
12. 6" AWWA C-900 PVC FIRE SERVICE

UTILITY NOTES:

1. FOR ALL SANITARY SEWERS, INSTALL SELECT FILL IN PAVED AREAS, EXTEND 5' MIN. BEYOND PAVEMENT LIMITS
2. BUILDINGS TO HAVE INVERT ELEVATION 5' MIN. BELOW F.F.E. OF THE BUILDING. PIPE TO BE 6" SDR-35 PVC @ 1.0% MIN. WITH MIN 4' OF COVER. ADD CLEANOUTS @ 90' MAX. SPACING FOR 6" LATERALS OVER 90' IN LENGTH.
3. COORDINATE GAS & ELEC. METER BANK LOCATIONS ON BUILDINGS WITH M.E.P. PLANS & UTILITY CO.'S.
4. COORDINATE LOCATION OF CTV & TELEPHONE SERVICE TO BUILDINGS WITH M.E.P. PLANS AND UTILITY CO.'S.
5. ANY EXISTING UTILITIES WHICH ARE TO BE ABANDONED AND FALL UNDER PAVEMENT OR BUILDINGS SHALL BE REMOVED VS. BEING ABANDONED UNLESS THOSE UTILITIES ARE FILLED WITH FLOWABLE FILL.
6. A MINIMUM OF 10 FEET HORIZONTAL AND 18 INCHES OF VERTICAL SEPARATION MUST BE MAINTAINED BETWEEN ALL SANITARY SEWER AND WATER SERVICES.
7. SELECT BACKFILL IS REQUIRED FOR ALL UTILITIES (GAS, WATER, STORM, SANITARY) THAT CROSS THROUGH CONCRETE AND ASPHALT PAVEMENT AREAS.

PROPOSED UTILITY LEGEND

PROPOSED WATER LINE	W
PROPOSED SANITARY SEWER	SA
PROPOSED UTILITY CONNECTIONS (GAS, ELEC., CABLE, TEL., ETC.)	
PROPOSED GATE VALVE	
PROPOSED CLEANOUT	
INSTALL SELECT BACKFILL	

NOTE: BOUNDARY AND TOPOGRAPHIC INFORMATION PROVIDED BY OTHERS, CARMINA WOOD DESIGN ASSUMES NO RESPONSIBILITY FOR ITS ACCURACY.

30' 30 0 30 60Ft.

CARMINAWOOD DESIGN
Buffalo | Utica | Greensboro

Proposed Multi-Family

4774 & 4780 Sheridan Drive
Amherst, NY

REVISIONS:

No.	Description	Date
1	Rev. per Town comments	6/12/24
2	Rev. per Town & ECWA comments	2/20/25

STATE OF NEW YORK · CHRISTOPHER WOOD · 076304 · LICENSED PROFESSIONAL ENGINEER

DRAWING NAME:
Utility Plan

Date: 4/22/24
Drawn By: P. Sheedy
Scale: As Noted

DRAWING NO.
C-400

Project No: 23-4091

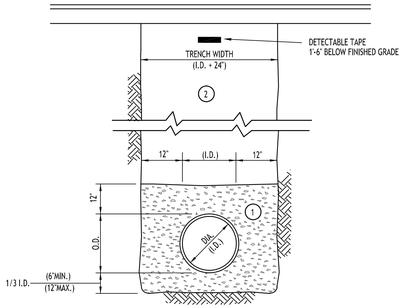

NOTES:

A. PIPE INSTALLATION SHALL BE IN ACCORDANCE WITH MANUFACTURERS RECOMMENDATIONS.

B. TRENCHING OPERATIONS SHALL INCLUDE ALL NECESSARY DEWATERING.

C. TRENCH DETAILS ARE ONLY SHOWN FOR PURPOSES OF MATERIAL PLACEMENT AND MAXIMUM PAY LIMITS.

D. AN OSHA APPROVED MOVABLE PROTECTIVE TRENCH SHIELD SHALL BE USED IN ALL UNSHEETED TRENCH AREAS.

MATERIALS

PIPE BEDDING MATERIAL (NYSDOT 1985 EDITION)

1. NO. 1 CRUSHED STONE OR CRUSHED GRAVEL WITH A GRADATION CONFORMING WITH NYSDOT SECTION 703-02. THE MATERIAL SHALL BE WELL GRADED WITH NO PARTICLES LARGER THAN ONE INCH AND HAVING A MAXIMUM GRADATION MEETING THE LIMITS DESCRIBED IN THE SPECIFICATIONS. THE BEDDING SHALL BE COMPACTED IN 6" LIFTS WITH EQUIPMENT ACCEPTABLE TO THE PIPE MANUFACTURER.

NO SLAG SHALL BE ALLOWED FOR MATERIAL (1)

2. TYPE 2 CRUSHED STONE OR CRUSHED GRAVEL WITH A GRADATION CONFORMING WITH NYSDOT SECTION 304-2.02 TYPE 2. THE MATERIAL SHALL BE WELL GRADED WITH NO PARTICLES LARGER THAN TWO INCHES AND HAVING A MAXIMUM GRADATION MEETING THE LIMITS DESCRIBED IN THE SPECIFICATIONS. THE BEDDING SHALL BE COMPACTED IN 6" LIFTS WITH EQUIPMENT ACCEPTABLE TO THE PIPE MANUFACTURER.

NO SLAG SHALL BE ALLOWED FOR MATERIAL (2)

SEWER/WATERLINE TRENCH SECTION IN PAVED AREAS

NOT TO SCALE

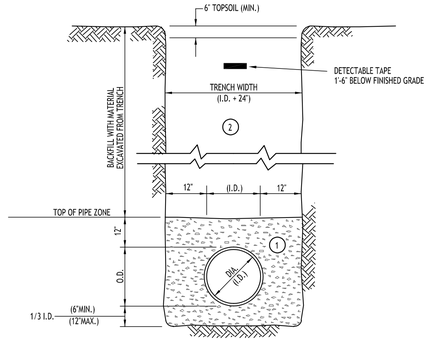

NOTES:

A. PIPE INSTALLATION SHALL BE IN ACCORDANCE WITH MANUFACTURERS RECOMMENDATIONS.

B. TRENCHING OPERATIONS SHALL INCLUDE ALL NECESSARY DEWATERING.

C. TRENCH DETAILS ARE ONLY SHOWN FOR PURPOSES OF MATERIAL PLACEMENT AND MAXIMUM PAY LIMITS.

D. AN OSHA APPROVED MOVABLE PROTECTIVE TRENCH SHIELD SHALL BE USED IN ALL UNSHEETED TRENCH AREAS.

MATERIALS

PIPE BEDDING MATERIAL (NYSDOT 1985 EDITION)

1. NO. 1 CRUSHED STONE OR CRUSHED GRAVEL WITH A GRADATION CONFORMING WITH NYSDOT SECTION 703-02. THE MATERIAL SHALL BE WELL GRADED WITH NO PARTICLES LARGER THAN ONE INCH AND HAVING A MAXIMUM GRADATION MEETING THE LIMITS DESCRIBED IN THE SPECIFICATIONS. THE BEDDING SHALL BE COMPACTED IN 6" LIFTS WITH EQUIPMENT ACCEPTABLE TO THE PIPE MANUFACTURER.

NO SLAG SHALL BE ALLOWED FOR MATERIAL (1)

2. BACKFILL MATERIAL SHALL BE NATIVE SOIL CONTAINING NO UNSUITABLE MATERIAL COMPACTED IN 6" LIFTS.

SEWER/WATERLINE TRENCH SECTION IN UNPAVED AREAS

NOT TO SCALE

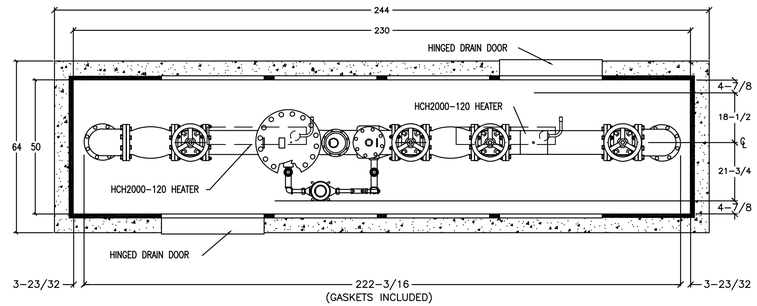

NOTES:

1. BACKFLOW PREVENTER DIMENSIONS FURNISHED BY WATTS
2. ALL DIMENSIONS ARE IN INCHES
3. WALL & INSULATION THICKNESS IS 1-1/2"
4. ROOF & INSULATION THICKNESS IS 3"
5. ENCLOSURE SHOWN IS SAFE-T-COVER MODEL 1000D-ALC00-17
6. EXTERIOR ENCLOSURE DIMENSIONS: 53"W x 233"L x 73" H
7. CONCRETE PAD IS 64"W x 244"L x 6"THK W/W.W.F. 6X6/10X10
8. METER SHOWN: 8" PROTECTUS III, SPOOL PIECE & METER SUPPLIED BY ECWA, VERIFY DIMENSIONS PRIOR TO ORDERING
9. RPZ SHOWN: 8" WATTS LF957 RPZ
10. CONTRACTOR TO INSTALL ELECTRIC SERVICE TO ENCLOSURE, COORDINATE SOURCE WITH OWNER
11. INSTALL A 120V GFI OUTLET IN THE ENCLOSURE
12. HEATERS TO HAVE THERMOSTAT CONTROL
13. ALL 8" PIPING & FITTINGS WITHIN THE ENCLOSURE SHALL BE DUCTILE IRON
14. CONCRETE PAD TO BE 6" ABOVE ADJACENT GRADE

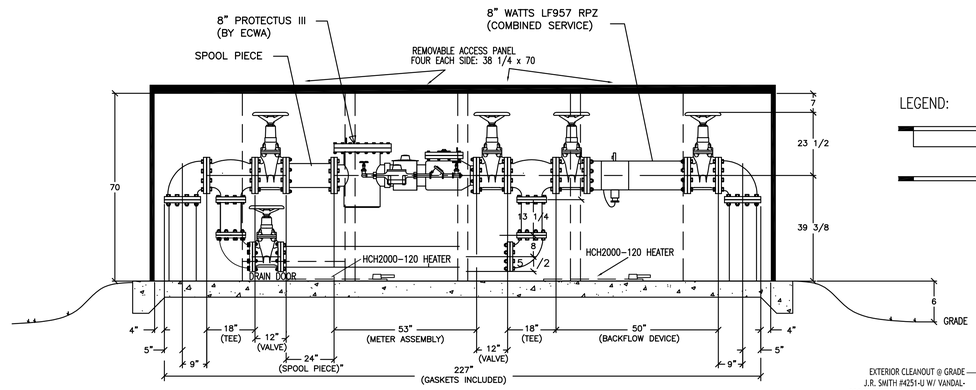

LEGEND:

REMOVABLE ACCESS PANEL 38 1/4"W x 70"H w/DRAIN DOOR

REMOVABLE ACCESS PANEL 38 1/4"W x 70"H

8"METER & RPZ INSULATED ENCLOSURE

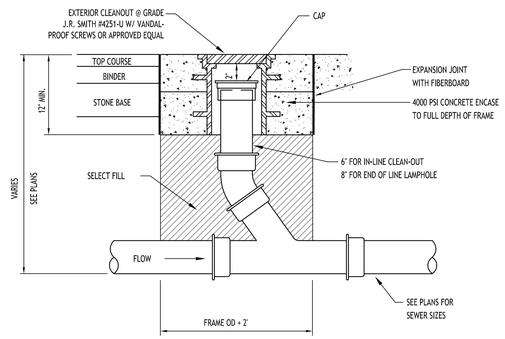

LAMPHOLE/CLEANOUT IN PAVEMENT/SIDEWALK

NOT TO SCALE

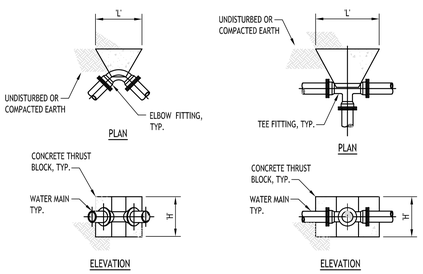

DIMENSION SCHEDULE								
PIPE SIZE	90° ELBOW		45° ELBOW		22.5° ELBOW		11.25° ELBOW	
	'H'	'L'	'H'	'L'	'H'	'L'	'H'	'L'
4"	1.5'	2.0'	1.0'	2.0'	1.0'	1.0'	1.0'	1.0'
6"	2.0'	2.5'	1.5'	2.0'	1.0'	1.5'	1.0'	1.5'
8"	2.5'	3.5'	2.0'	2.5'	1.5'	1.5'	1.0'	2.0'
10"	3.0'	4.5'	2.5'	3.0'	1.5'	3.0'	1.0'	2.5'
12"	3.5'	5.0'	3.0	3.5'	2.5'	2.5'	1.5'	2.5'

DIMENSION SCHEDULE		
PIPE SIZE	TEE OR TAP SLEEVE	
----	'H'	'L'
4"	1.5'	1.0'
6"	1.5'	2.5'
8"	1.5'	3.5'
10"	2.5'	3.5'
12"	3.5'	3.5'

THRUST BLOCK SCHEDULE

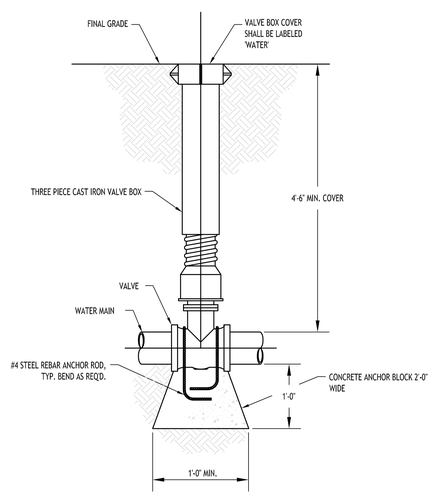

TYPICAL GATE VALVE DETAIL

NOT TO SCALE

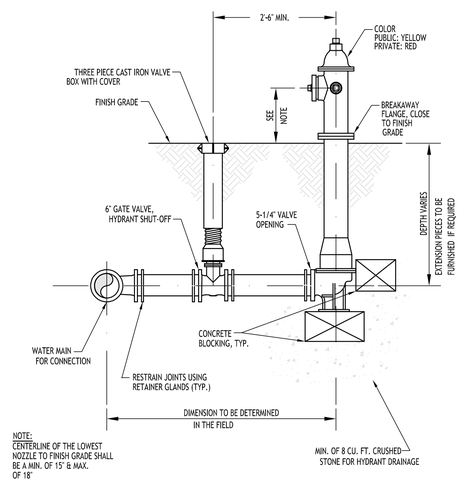

NOTE:
CENTERLINE OF THE LOWEST NOZZLE TO FINISH GRADE SHALL BE A MIN. OF 15" & MAX. OF 18"

TYPICAL FIRE HYDRANT ASSEMBLY DETAIL

NOT TO SCALE

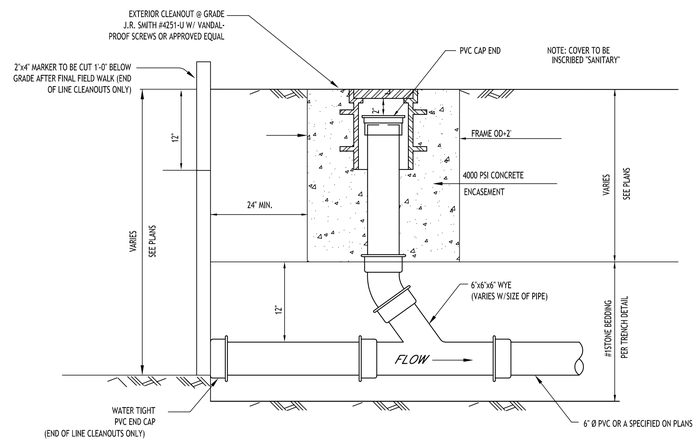

LAMPHOLE/CLEANOUT IN LAWN/FIELD AREAS

NOT TO SCALE

CARMINAWOOD
DESIGN
Buffalo | Utica | Greensboro

Proposed Multi-Family

4774 & 4780 Sheridan Drive
Amherst, NY

REVISIONS:

No.	Description	Date
1	Rev. per Town comments	6/12/24
2	Rev. per ECWA comments	2/20/25
3	Rev. per ECWA comments	4/24/25

DRAWING NAME:
Utility Details

Date: 4/22/24
Drawn By: P. Sheedy
Scale: As Noted

DRAWING NO.
C-401

Project No: 23-4091

PRECAST CONCRETE MANHOLE OVER EXISTING SEWER (18"–30" DIA.)

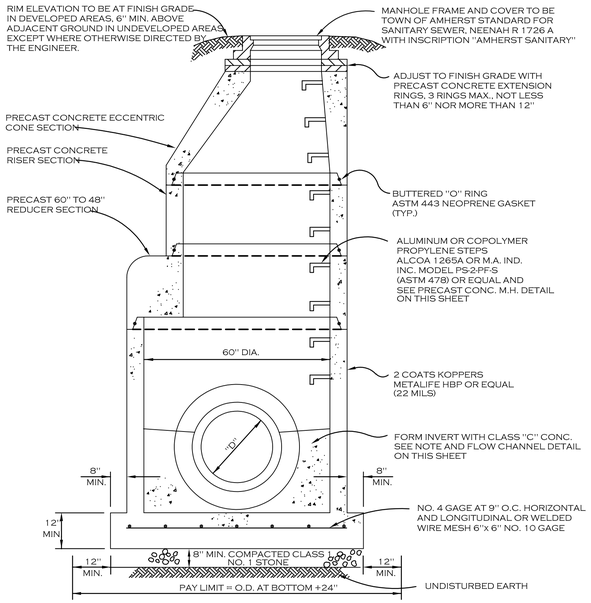

PRECAST CONCRETE MANHOLE

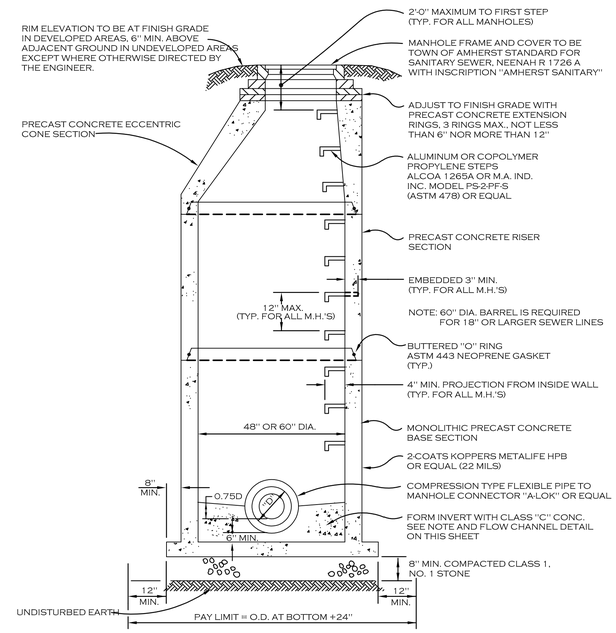

STANDARD MANHOLE FRAME AND COVER

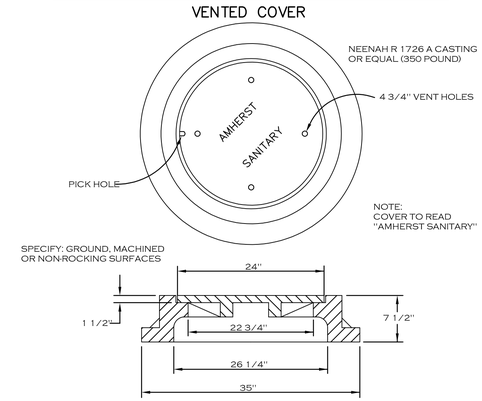

FLOW CHANNEL DETAIL SANITARY SEWERS

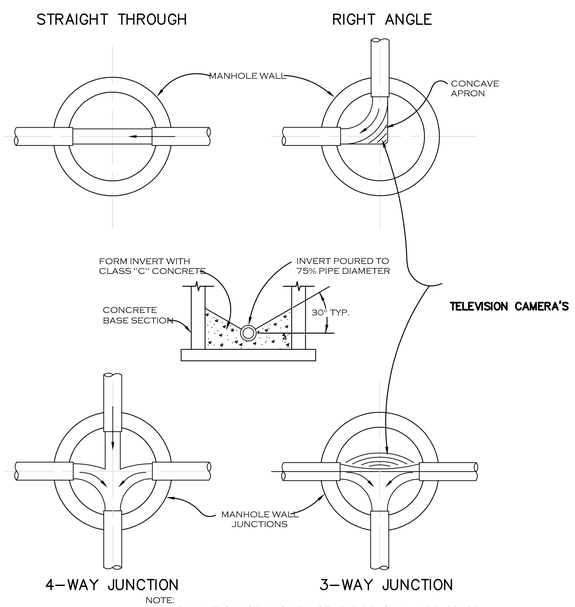

NOTE:
FLOW CHANNELS MUST ALLOW PLACEMENT, REMOVAL AND PASSAGE OF T.V. CAMERAS. THE CAMERA DIMENSIONS ARE APPROXIMATELY 26" LONG x 6 1/2" SQUARE. A BLOCK OF WOOD OF THESE DIMENSIONS MAY BE USED TO SIMULATE THE SIZE OF THE CAMERA. THIS WILL SIMPLIFY THE FORMATION OF FLOW CHANNELS AND INVERTS.

DEPTH OF ALL CHANNELS TO BE 75% OF PIPE DIAMETER.

FINISH ALL CHANNELS AT PROPER GRADE AS TO ALLOW SMOOTH & UN-OBSTRUCTED FLOW ALL INVERTS TO BE FLUSH WITH THE INSIDES.

CARMINAWOOD DESIGN
Buffalo | Utica | Greensboro

Proposed Multi-Family
4774 & 4780 Sheridan Drive
Amherst, NY

REVISIONS:

No.	Description	Date

DRAWING NAME:
Sanitary Sewer Details

Date: 4/22/24
Drawn By: P. Sheedy
Scale: As Noted

DRAWING NO.
C-402

Project No: 23-4091

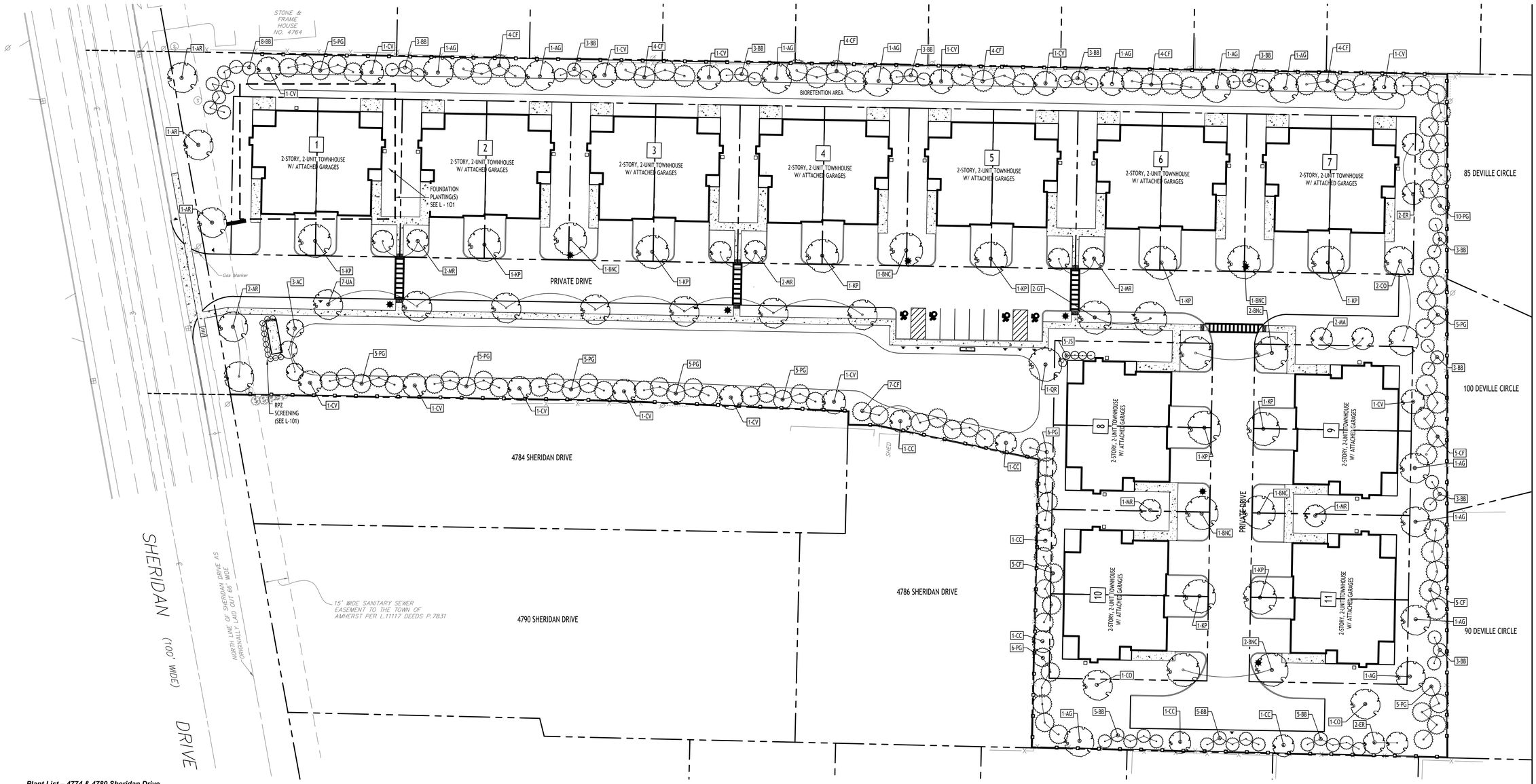

Plant List – 4774 & 4780 Sheridan Drive

SYMBOL	QUANTITY	BOTANICAL NAME	COMMON NAME	SIZE	NOTES
DECIDUOUS TREES					
AR	5	Acer rubrum 'Autumn Flame'	Autumn Flame Maple	2½"-3"Cal.	B&B; Grows to 40 ft, high, 35 ft. wide
BNC	9	Betula nigra 'Cully'	Heritage River Birch	12 ft. high min	B&B; Multi-stem, min. 3 major stems
CO	4	Celtis occidentalis 'Prairie Pride'	Prairie Pride Common Hackberry	2½"-3"Cal.	B&B; Grows to 40 ft, high, 35 ft. wide
GT	2	Gleditsia triacanthos inermis 'Suncole'	Skyline Honeylocust	2½"-3"Cal.	B&B; Grows to 45 ft, high, 35 ft. wide
KP	11	Koelreuteria paniculata	Goldenrain Tree	2½"-3"Cal.	B&B; Grows to 30-40 ft. high and wide
QR	1	Quercus rubra	Red Oak	2½"-3"Cal.	B&B; Grows to 75 ft, high, 60 ft. wide
UA	7	Ulmus americana 'Princeton'	Princeton Elm	2½"-3"Cal.	B&B; Grows to 65 ft, high, 45 ft. wide
SMALL/ORNAMENTAL TREES					
AC	3	Amelanchier canadensis	Shadblow Serviceberry	8' High Min.	B&B; Height to 20 ft., width to 20 ft.
AG	12	Amelancjier grandiflora 'Autumn Brilliance'	Autumn Brilliance Serviceberry	8' High Min.	B&B; Height to 20 ft., width to 20 ft.
CC	6	Crataegus crusgalli inermis 'Cruzam'	Crusader Hawthorn	1¾"-2" Cal.	B&B; Height to 15 ft., width to 15 ft.
CV	14	Chionanthus virginicus	White Fringe Tree	8' High Min.	B&B; Height to 18 ft., width to 20 ft.
ER	4	Cercis canadensis	Eastern Redbud	8' High Min.	B&B; Height to 18 ft., width to 20 ft.
MA	2	Malus 'Adirondack'	Adirondack Crabapple	1¾"-2" Cal.	B&B; Height to 18 ft., width to 10 ft.
MR	8	Malus 'JFS KWS'	Royal Raindrops Crabapple	1¾"-2" Cal.	B&B; Height to 20 ft., width to 15 ft.
EVERGREEN TREES					
CF	46	Abies concolor	White Fir	5' High min.*	B&B; Full to Ground
PG	62	Picea glauca	White Spruce	5' High min.*	B&B; Full to Ground
BB	53	Picea pungens 'Baby Blue Eyes'	Baby Blue Eyes Colorado Spruce	5' High min.*	B&B, Full to Ground; grows 15 to 30 ft. tall, 15 ft. wide.
				*Measured from bottom of leader	
SHRUBS					
CP	66	Chamaecyparis pisifera 'FARROWCGMS'	Soft Serve Gold False Cypress	36 " High Min.	No. 7 Cont.; Grows 6-10 ft. high, 5-6 ft. wide
DG	66	Diervilla 'G2X88544'	Kodiak Orange Diervilla	24" High Min.	Grows to 4 ft. high and wide
HS	66	Hydrangea serrata 'SMNMAKTSR'	Tuff Stuff Red Hydrangea	24" High Min.	No. 5 Cont.; grows 3-4 ft. high and wide
JS	17	Juniperus scopulorum 'Blue Moffat'	Blue Moffat Juniper	4' High Min.	B&B: Grows to 15 ft. tall, 6 ft. wide.
ORNAMENTAL GRASS/GROUND COVER					
AMU	77	Aronia melanocarpa 'UCONNAM165'	Low Scape Mound Aronia	12" High Min.	No. 2 Cont.; Grows 1-2 feet high and 2-3 ft. wide

NOTE: All planting beds and trees shall receive a minimum 3-inch depth of dark shredded hardwood bark mulch

Landscape Plan

SCALE: 1"=30'

LANDSCAPE NOTES:

1. ALL PLANTS INSTALLED SHALL MEET OR EXCEED THE MINIMUM REQUIREMENTS AS NOTED ON THE PLANS AND IN THE LATEST EDITION ON THE AMERICAN STANDARD FOR NURSERY STOCK, BY THE AMERICAN ASSOCIATION OF NURSERYMEN, ANSI Z60.1

2. THE CONTRACTOR SHALL BE RESPONSIBLE FOR HIS OWN QUANTITY TAKEOFF, THE QUANTITIES SHOWN ARE A MINIMUM AND ARE FOR REFERENCE ONLY.

3. THE CONTRACTOR SHALL PERFORM A ROUGH FIELD STAKEOUT OF ALL PLANTING MATERIAL LOCATIONS AND CONTACT THE OWNERS FIELD REPRESENTATIVE PRIOR TO ACTUALL INSTALLING. THE PLANTING MATERIAL LOCATIONS SHOWN ON THE PLANS ARE TO CONVEY THE DESIGN INTENT ONLY, ACTUAL LOCATIONS WILL BE FINALIZED BY THE OWNERS FIELD REPRESENTATIVE AT THE TIME OF INSTALLATION.

4. THE CONTRACTOR IS HEREBY NOTIFIED THAT IF UNDERGROUND UTILITIES EXIST IN THE VICINITY OF THE PLANTINGS, ALL PROPOSED PLANTINGS SHALL BE INSTALLED A MINIMUM OF 5' FROM ANY UNDERGROUND UTILITY, CONTACT THE OWNERS FIELD REPRESENTATIVE IF PLANTINGS SHOWN ON THE PLANS VIOLATE THIS SITUATION.

5. ALL TREES SHALL BE INSTALLED A MINIMUM OF 20' FROM ANY OVERHEAD ELECTRIC LINES.

6. PLANTING BACKFILL MIXTURE SHALL CONSIST OF 3 PARTS TOPSOIL, 1 PART PEAT MOSS, ½ PART MILORGANITE.

7. STAKE TREES IMMEDIATELY FOLLOWING INSTALLATION.

8. ALL PLANTED AREAS SHALL RECEIVE A 3' LAYER OF SHREDDED HARDWOOD BARK MULCH WITH 'PREEN'.

9. ALL DISTURBED AREAS NOT RECEIVING PLANTINGS (INCLUDING RIGHT-OF-WAYS) SHALL BE SEEDED. ALL DISTURBED LAWN AREA WITHIN THE NEW YORK STATE DEPARTMENT OF TRANSPORTATION (NYSDOT) ROW IS TO BE RESTORED USING ITEM 610.1402 TOPSOIL - ROADSIDE, AND ITEM 610.1602 TURF ESTABLISHMENT - LAWN (OR EQUAL) AND SHALL COMPLY WITH NYSDOT STANDARD SPECIFICATIONS SECTION 713-LANDSCAPE DEVELOPMENT MATERIALS.

10. THE AREAS ON THE PLAN TO BE SEEDED SHALL HAVE 4" MINIMUM OF TOPSOIL, DISK PLOWED, LEVELED AND HAND RAKED SMOOTH. SURFACE SHALL BE ROLLED TO REMOVE LUMPS.

11. ALL SEEDED AREAS SHALL BE HYDROSEEDED IN ACCORDANCE WITH THE SPECIFICATION INDICATED. WHERE REQUIRED BY CLIMATIC CONDITIONS, SLOPE OR SEASON OF PLANTING, SOD MAY BE SUBSTITUTED FOR SEEDING IN ORDER TO ACHIEVE THE REQUIRED COVERAGE.

12. THE CONTRACTOR SHALL BE RESPONSIBLE FOR WATERING, MOWING AND OTHER MAINTENANCE TO SEEDED AREAS UNTIL THE PROJECT IS ACCEPTED BY THE OWNER. THIS SHALL INCLUDE WATERING DAILY FOR 15 DAYS OR AS REQUIRED BY WEATHER CONDITIONS AND RE-SEEDING OF THIN SPOTS FOLLOWING THE GERMINATION OF THE SEEDS.

13. EXISTING TREE LOCATIONS ARE APPROXIMATE, CONTRACTOR TO LOCATE LOCATIONS PRIOR TO CONSTRUCTION AND COORDINATE WITH TOWN LANDSCAPE ARCHITECT WHICH TREES SHALL BE REMOVED AND WHICH SHALL REMAIN AND BE PROTECTED DURING CONSTRUCTION.

PLANTING NOTES:

1. ALL INTERIOR LANDSCAPED AREAS SHALL HAVE A MINIMUM PLANTING SOIL DEPTH OF THREE (3) FEET AND BE FREE FROM ALL FORMS OF CONSTRUCTION DEBRIS AND FOREIGN MATERIAL.

2. ALL TREE PIT SAUCERS, SHRUB BEDS, ORNAMENTAL GRASS BEDS, AND PERENNIAL FLOWER BEDS SHALL RECEIVE 'PREEN' HERBICIDE AND THREE (3) INCHES DEPTH OF DARK SHREDDED HARDWOOD BARK MULCH.

3. ALL SEASONAL FLOWER BEDS SHALL BE A MINIMUM OF TWELVE (12) INCHES DEEP WITH A WELL-BLENDED MIXTURE OF 50% PEAT MOSS & 50% SCREENED TOPSOIL. SEASONAL FLOWER BEDS SHALL RECEIVE 'PREEN' HERBICIDE. NO MULCH SHALL BE INSTALLED IN THE SEASONAL FLOWER BEDS.

4. ALL DECIDUOUS AND EVERGREEN TREES SHALL BE STAKED WITH THREE (3) TREE STAKES AS PER TREE PLANTING DETAIL.

LANDSCAPE LEGEND

DECIDUOUS TREE

SMALL TREE

EVERGREEN TREE/SHRUB

SHRUB

NOTE: BOUNDARY AND TOPOGRAPHIC INFORMATION PROVIDED BY OTHERS, CARMINA WOOD DESIGN ASSUMES NO RESPONSIBILITY FOR ITS ACCURACY.

30' 30 0 30 60Ft.

CARMINAWOOD DESIGN
Buffalo | Utica | Greensboro

Proposed Multi-Family

4774 & 4780 Sheridan Drive
Amherst, NY

REVISIONS:

No.	Description	Date
1	Rev. per Town comments	6/3/24
2	Rev. per Town comments	6/20/24
3	Rev. per DOT comments	11/1/24
4	Rev. per DOT comments	11/13/24

REGISTERED LANDSCAPE ARCHITECT ROBERT C. WALTER NO. 001189 STATE OF NEW YORK

Robert C. Walter, RLA
Registered Landscape Architect
Member American Society of Landscape Architects
2765 Dodge Road, East Amherst, NY 14051-2113
Phone: 716-364-5364
RCWLandscapeArchitect@gmail.com

DRAWING NAME:
Landscape Plan

Date: 4/22/24
Drawn By: P. Sheedy
Scale: As Noted

DRAWING NO.
L-100

Project No: 23-4091

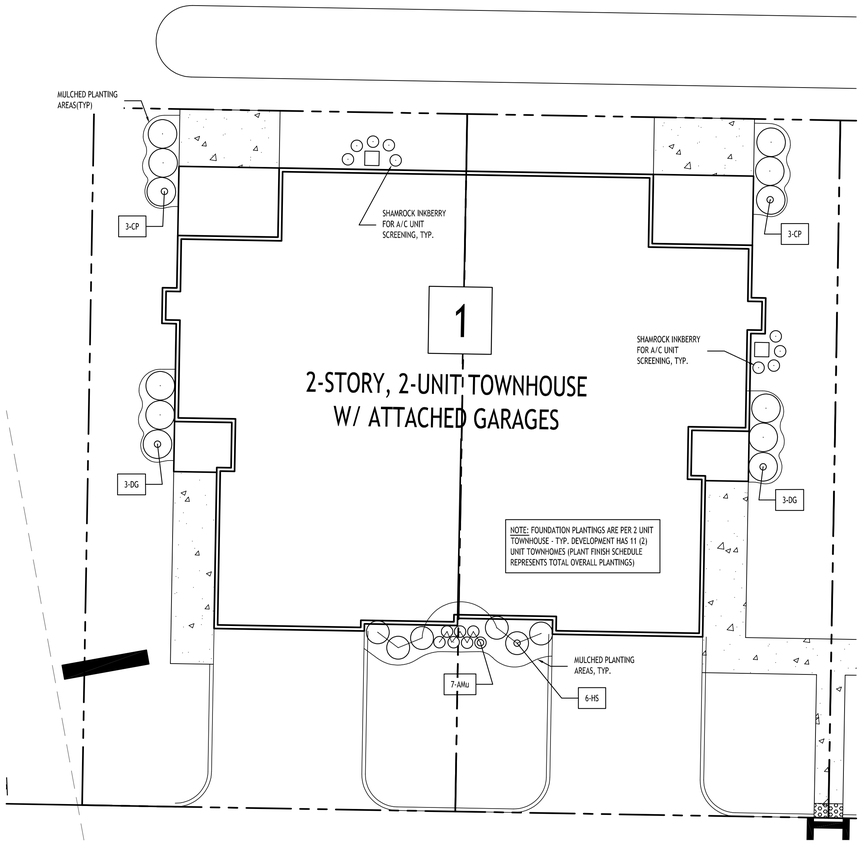

Landscape Foundation Planting

SCALE: 1"=10'

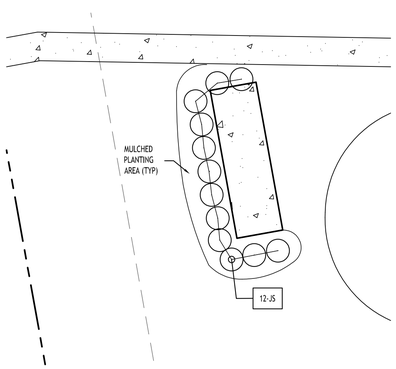

RPZ Screen Planting

SCALE: 1"=10'

LANDSCAPE LEGEND

DECIDUOUS TREE

SMALL TREE

EVERGREEN TREE/SHRUB

SHRUB

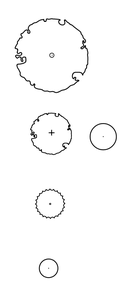

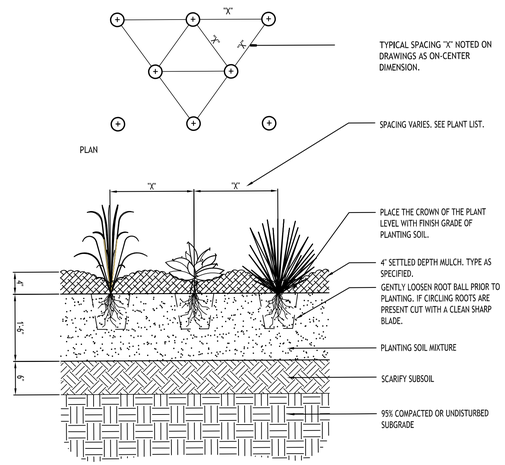

SECTION

NOTE: PLANT BULBS IN TRENCHES AND BOUQUET PLANTING GROUPS.

GROUND COVER PLANT SPACING

NO TO SCALE

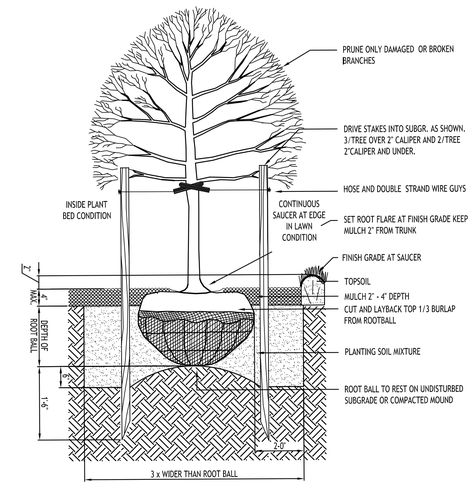

STD. DECIDUOUS TREET PLANTING

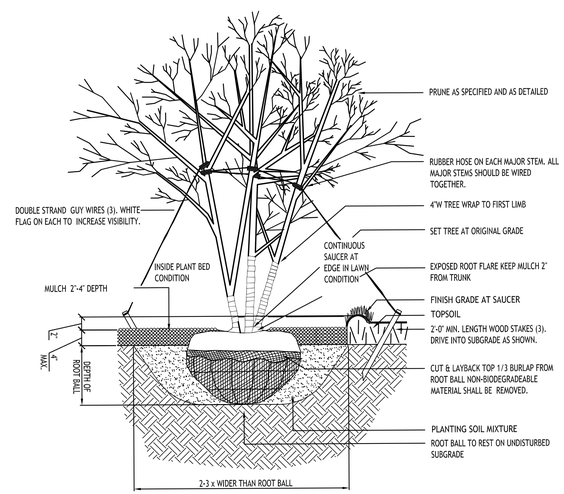

MULTI STEM - DECIDUOUS TREET PLANTING

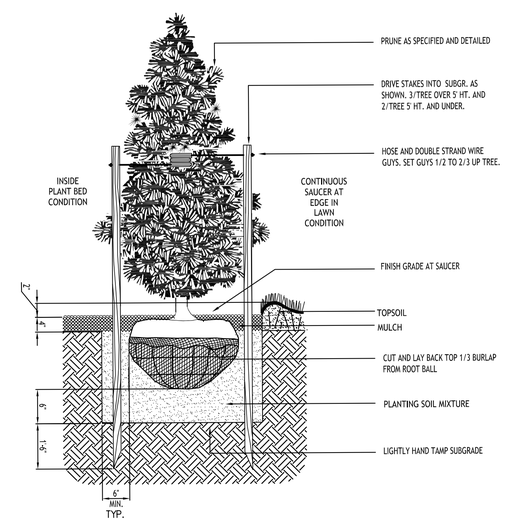

STD. EVERGREEN PLANTING

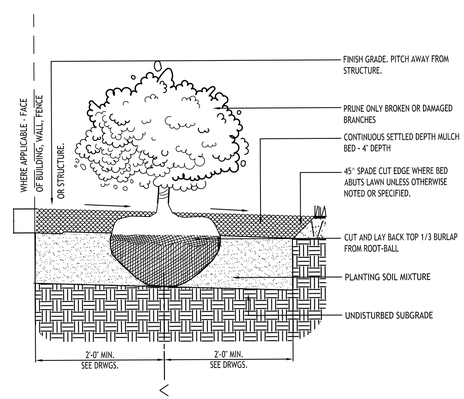

STD. SHRUB PLANTING

NOTE: BOUNDARY AND TOPOGRAPHIC INFORMATION PROVIDED BY OTHERS, CARMINA WOOD DESIGN ASSUMES NO RESPONSIBILITY FOR ITS ACCURACY.

30' 30 0 30 60Ft.

CARMINAWOOD DESIGN
Buffalo | Utica | Greensboro

Proposed Multi-Family

4774 & 4780 Sheridan Drive
Amherst, NY

REVISIONS:

No.	Description	Date
1	Rev. per Town comments	6/3/24

Robert C. Walter, RLA
Registered Landscape Architect
Member American Society of Landscape Architects
2765 Dodge Road, East Amherst, NY 14051-2113
Phone: 716-364-5564
RCWLandscapeArchitect@gmail.com

DRAWING NAME:

Landscape Foundation Plans Details

Date: 4/22/24
Drawn By: P. Sheedy
Scale: As Noted

DRAWING NO.

L-101

Project No: 23-4091

CARMINA WOOD DESIGN

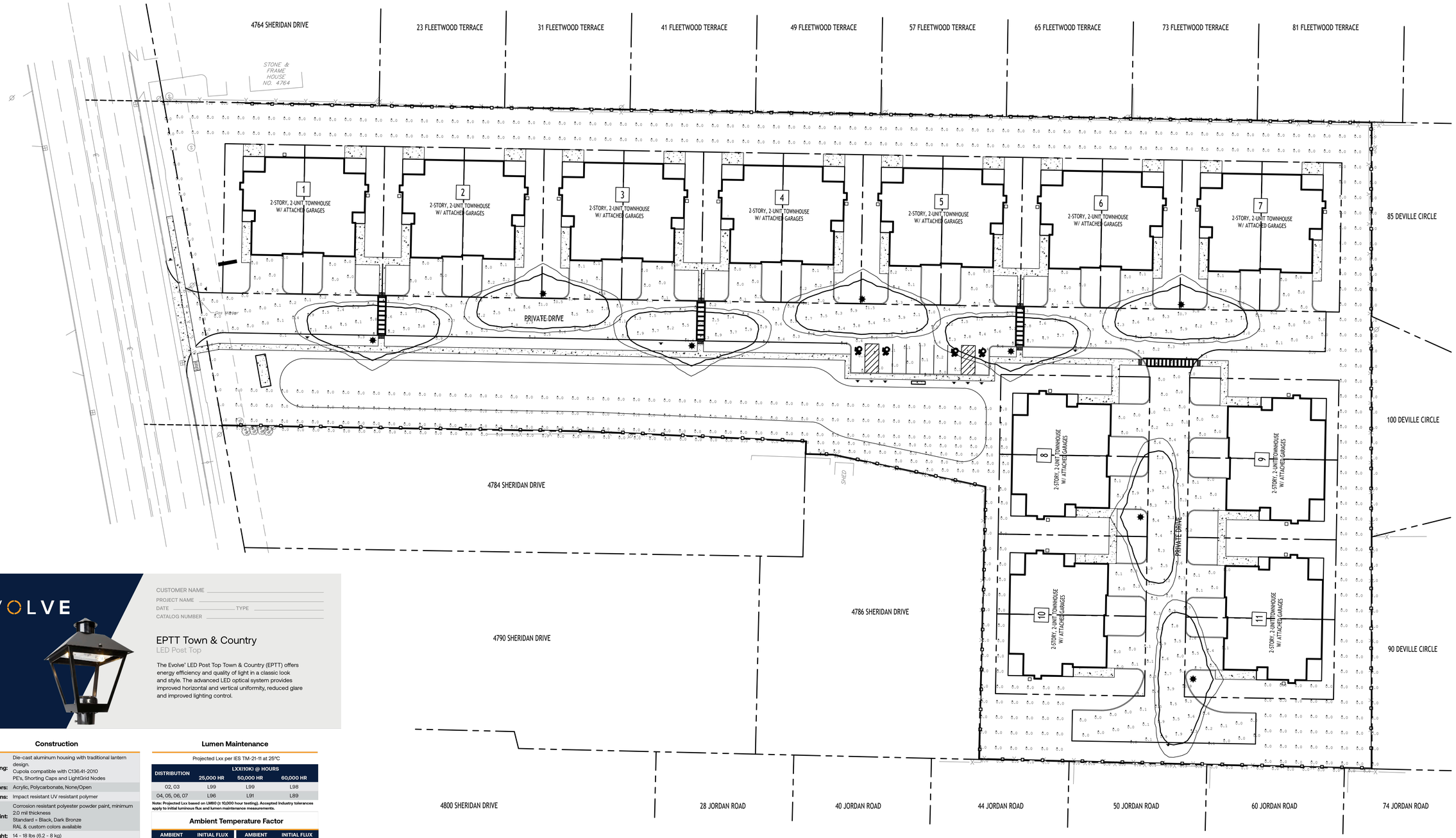

Lighting Plan

SCALE: 1"=30'

Lighting Calculations Prepared by LightSpec, LLC
For pricing please contact David Suriani at dsuriani@lightspec.com

Luminaire Schedule

Symbol	Qty	Label	Description
✱	8	S1	Hadco TVLN-48-G1-7-2S-740

Calculation Summary

Label	CalcType	Units	Avg	Max	Min
Driveway Area	Illuminance	Fc	1.46	11.6	0.0
Property Line	Illuminance	Fc	0.00	0.3	0.0

NOTE: BOUNDARY AND TOPOGRAPHIC INFORMATION PROVIDED BY OTHERS, CARMINA WOOD DESIGN ASSUMES NO RESPONSIBILITY FOR ITS ACCURACY.

30' 30 0 30 60Ft.

EVOLVE

CUSTOMER NAME
PROJECT NAME
DATE TYPE
CATALOG NUMBER

EPTT Town & Country

LED Post Top

The Evolve® LED Post Top Town & Country (EPTT) offers energy efficiency and quality of light in a classic look and style. The advanced LED optical system provides improved horizontal and vertical uniformity, reduced glare and improved lighting control.

Construction

Housing:	Die-cast aluminum housing with traditional lantern design. Cupola compatible with C136.41-2010 PE's, Shorting Caps and LightGrid Nodes
Refractors:	Acrylic, Polycarbonate, None/Open
Lens:	Impact resistant UV resistant polymer
Paint:	Corrosion resistant polyester powder paint, minimum 2.0 mil thickness Standard = Black, Dark Bronze RAL & custom colors available
Weight:	14 - 18 lbs (6.2 - 8 kg)

Optical System

Lumens:	2,070-7,970
Distribution:	Symmetric Asymmetric
Efficacy:	72-130
CCT:	2700K, 3000K, 4000K, 5000K
CRI (Min):	≥70

Electrical

Input Voltage:	120-277V
Input Frequency:	50/60Hz
Power Factor:	≥ 90% at rated watts
Total Harmonic Distortion:	≤ 20% at rated watts

Surge Protection*

STANDARD	OPTIONAL
☐ 10kV/5kA	☐ Secondary 10kV/5kA (R Option)

*Per ANSI C136.2-2015

Lumen Maintenance

Projected Lxx per IES TM-21-11 at 25°C

DISTRIBUTION	LXX(10K) @ HOURS		
	25,000 HR	50,000 HR	60,000 HR
02, 03	L99	L99	L98
04, 05, 06, 07	L96	L91	L89

Note: Projected Lxx based on LM80 (≥ 10,000 hour testing). Accepted industry tolerances apply to initial luminous flux and lumen maintenance measurements.

Ambient Temperature Factor

AMBIENT TEMP (°C)	INITIAL FLUX FACTOR	AMBIENT TEMP (°C)	INITIAL FLUX FACTOR
10	1.02	30	0.99
20	1.01	40	0.98
25	1.00	50	0.97

Ratings

Operating Temperature:	-40°C to 50°C (Optical Code 02-06) -40°C to 40°C (Optical Code 07)
Vibration:	3G per ANSI C136.31-2010
LM-79:	Testing in accordance with IES Standards

Controls

Dimming:	Standard - 0-10V ☐ Optional – DALI (Option U) ☐
Sensors:	Photo Electric Sensors (PE) available LightGrid Compatible

Warranty

☐ 5 Year (Standard) ☐ 10 Year (Optional)

Not all product variations listed on this page are DLC qualified. Visit www.designlights.org/search to confirm qualifications.

Current

LED.com

CARMINAWOOD DESIGN
Buffalo | Utica | Greensboro

Proposed Multi-Family

4774 & 4780 Sheridan Drive
Amherst, NY

REVISIONS:

No.	Description	Date
1	Rev. per Town comments	6/12/24

STATE OF NEW YORK
R. CHRISTOPHER WOOD
076394
LICENSED PROFESSIONAL ENGINEER

DRAWING NAME:
Lighting Plan

Date: 4/22/24
Drawn By: P. Sheedy
Scale: As Noted

DRAWING NO.
LP-100

Project No: 23-4091

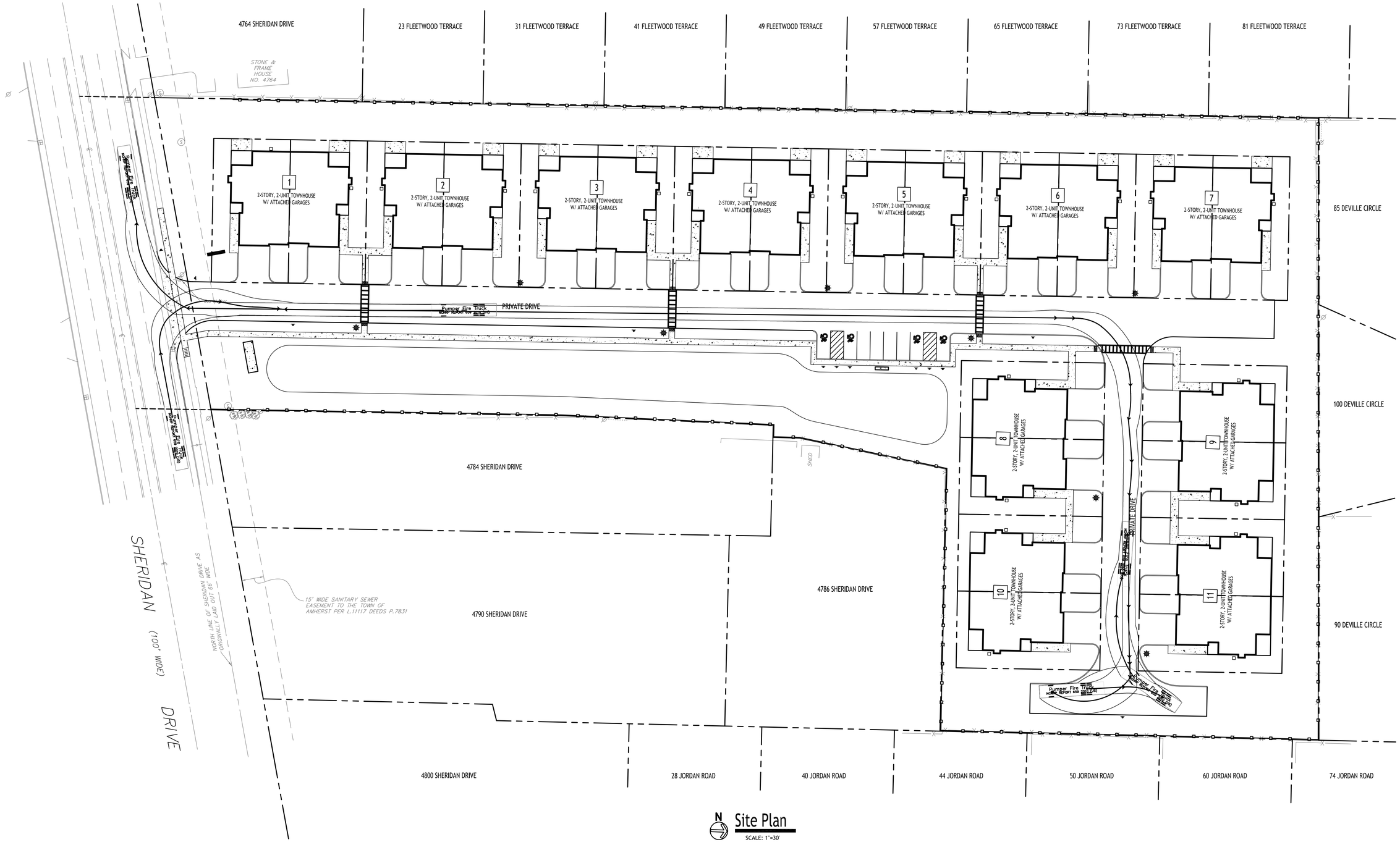

Site Plan

SCALE: 1"=30'

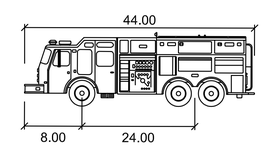

Pumper Fire Truck

	feet
Width	: 8.50
Track	: 8.50
Lock to Lock Time	: 6.0
Steering Angle	: 37.8

NOTE: BOUNDARY AND TOPOGRAPHIC INFORMATION PROVIDED BY OTHERS, CARMINA WOOD DESIGN ASSUMES NO RESPONSIBILITY FOR ITS ACCURACY.

30' 30 0 30 60Ft.

CARMINA WOOD DESIGN
Buffalo | Utica | Greensboro

Proposed Multi-Family

4774 & 4780 Sheridan Drive
Amherst, NY

REVISIONS:

No.	Description	Date

DRAWING NAME:

Truck Turn Plan

Date: 4/22/24
Drawn By: P. Sheedy
Scale: As Noted

DRAWING NO.

CT-100

Project No: 23-4091

PEDESTRIAN TRAFFIC CONTROL FOR SIDEWALK CLOSURES IN THE VICINITY OF A WORK AREA WITH TEMPORARY SIDEWALK

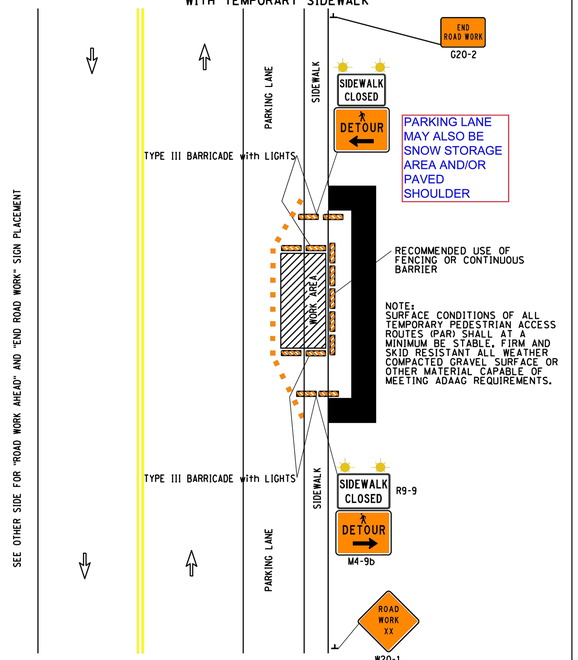

2-3 REV 01/20/12

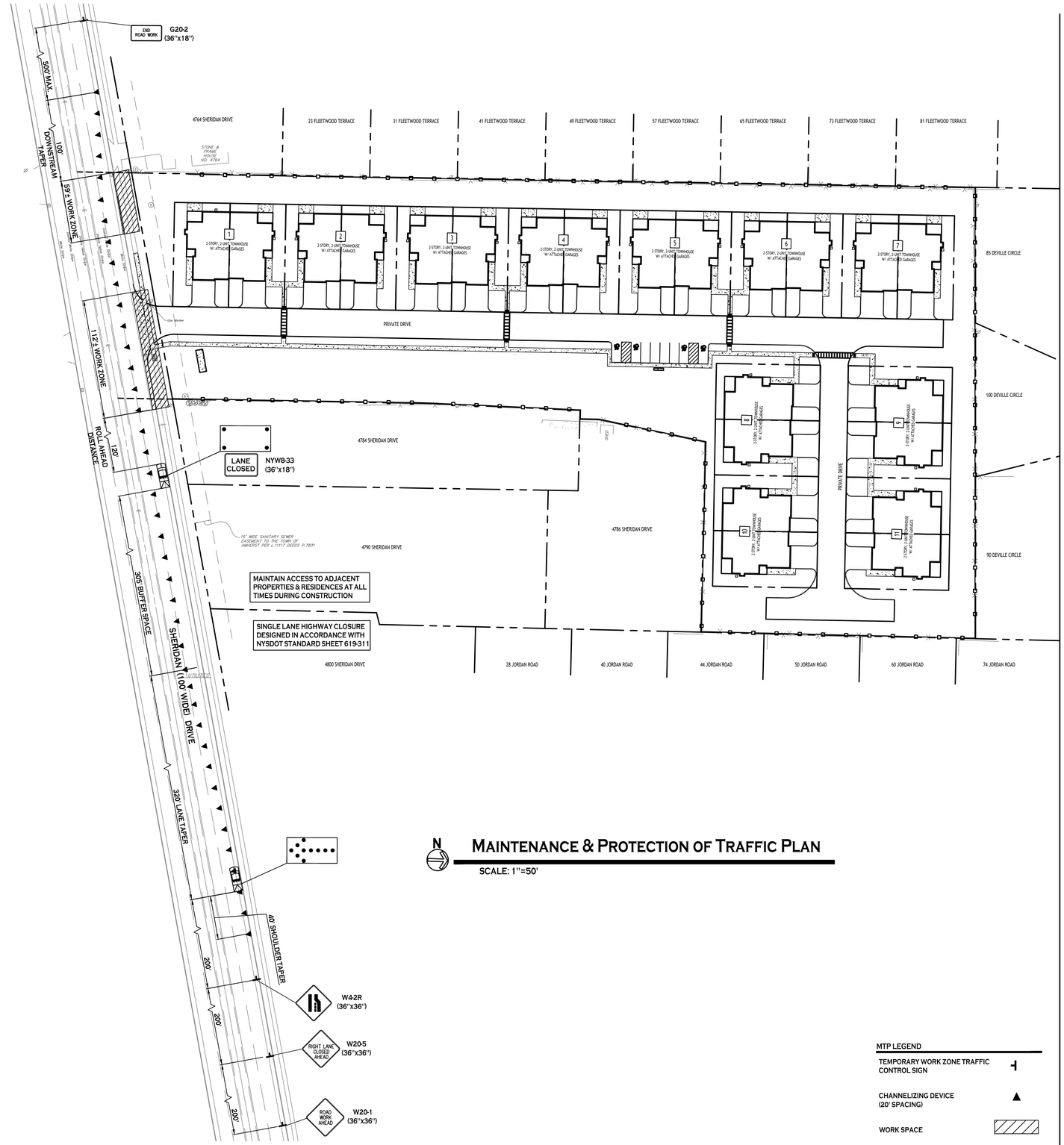

N

MAINTENANCE & PROTECTION OF TRAFFIC PLAN

SCALE: 1"=50'

MTP LEGEND

TEMPORARY WORK ZONE TRAFFIC CONTROL SIGN	
CHANNELIZING DEVICE (20' SPACING)	▲
WORK SPACE	

NOTE: BOUNDARY AND TOPOGRAPHIC INFORMATION PROVIDED BY OTHERS, CARMINA WOOD DESIGN ASSUMES NO RESPONSIBILITY FOR ITS ACCURACY.

50 0 50 100Ft.

50'

CARMINAWOOD DESIGN
Buffalo | Utica | Greensboro

Proposed Multi-Family

4774 & 4780 Sheridan Drive
Amherst, NY

REVISIONS:

No.	Description	Date
1	Rev. per DOT comments	11/1/24
2	Rev. per DOT comments	2/3/25

STATE OF NEW YORK · R. CHRISTOPHER HOBBS · 087639A · LICENSED PROFESSIONAL ENGINEER

DRAWING NAME:
Maintenance & Protection of Traffic Plan

Date: 4/22/24
Drawn By: P. Sheedy
Scale: As Noted

DRAWING NO.
M-100

Project No: 23-4091

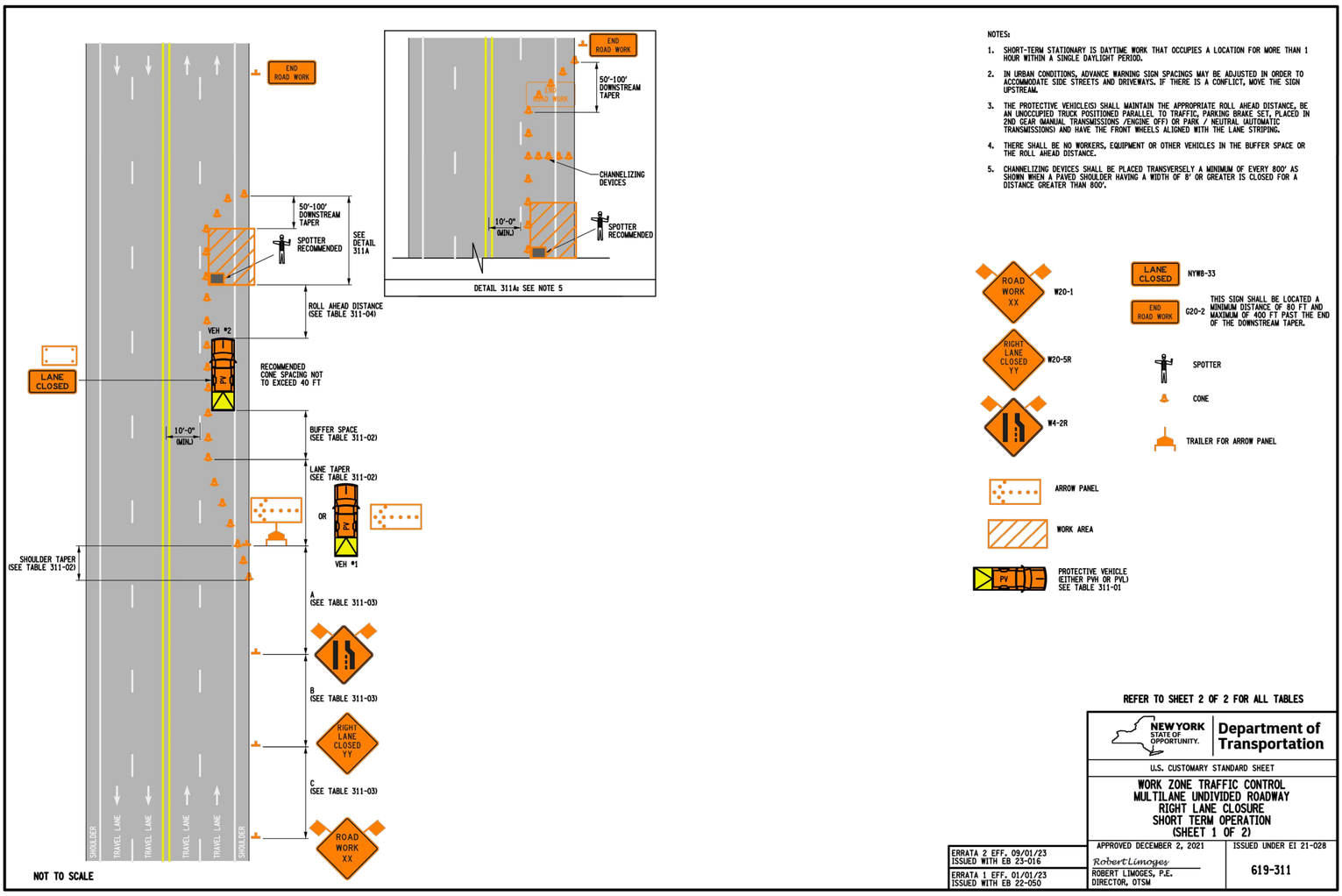

NOTES:

1. SHORT-TERM STATIONARY IS DAYTIME WORK THAT OCCUPIES A LOCATION FOR MORE THAN 1 HOUR WITHIN A SINGLE DAYLIGHT PERIOD.
2. IN URBAN CONDITIONS, ADVANCE WARNING SIGN SPACINGS MAY BE ADJUSTED IN ORDER TO ACCOMMODATE SIDE STREETS AND DRIVEWAYS. IF THERE IS A CONFLICT, MOVE THE SIGN UPSTREAM.
3. THE PROTECTIVE VEHICLE(S) SHALL MAINTAIN THE APPROPRIATE ROLL AHEAD DISTANCE, BE AN UNOCCUPIED TRUCK POSITIONED PARALLEL TO TRAFFIC, PARKING BRAKE SET, PLACED IN 2ND GEAR (MANUAL TRANSMESSIONS /ENGINE OFF) OR PARK / NEUTRAL (AUTOMATIC TRANSMISSIONS) AND HAVE THE FRONT WHEELS ALIGNED WITH THE LANE STRIPING.
4. THERE SHALL BE NO WORKERS, EQUIPMENT OR OTHER VEHICLES IN THE BUFFER SPACE OR THE ROLL AHEAD DISTANCE.
5. CHANNELIZING DEVICES SHALL BE PLACED TRANSVERSELY A MINIMUM OF EVERY 800' AS SHOWN WHEN A PAVED SHOULDER HAVING A WIDTH OF 8' OR GREATER IS CLOSED FOR A DISTANCE GREATER THAN 800'.

REFER TO SHEET 2 OF 2 FOR ALL TABLES

NEW YORK STATE OF OPPORTUNITY. Department of Transportation

U.S. CUSTOMARY STANDARD SHEET

WORK ZONE TRAFFIC CONTROL
MULTILANE UNDIVIDED ROADWAY
RIGHT LANE CLOSURE
SHORT TERM OPERATION
(SHEET 1 OF 2)

APPROVED DECEMBER 2, 2021 — ISSUED UNDER EI 21-028

Robert Limoges
ROBERT LIMOGES, P.E.
DIRECTOR, OTSM

619-311

ERRATA 2 EFF. 09/01/23 ISSUED WITH EB 23-016
ERRATA 1 EFF. 01/01/23 ISSUED WITH EB 22-050

FILE NAME = 619-311-1.dgn
DATE/TIME = 18-JUN-2023 12:13
USER = rfoote

TABLE 311-01: PROTECTIVE VEHICLE REQUIREMENTS

CLOSURE TYPE	ROAD TYPE & SPEED	NON-FREEWAY		
		≥ 45 MPH	35 - 40 MPH	≤ 30 MPH
	EXPOSURE CONDITIONS (SEE NOTE 1)			
LANE CLOSURE OR ENCROACHMENT	WORKERS ON FOOT OR WORK VEHICLE EXPOSED TO TRAFFIC	PVH+TMIA	PVL+TMIA	PVL
LANE CLOSURE OR ENCROACHMENT	-NO WORKERS ON FOOT -NO WORK VEHICLE EXPOSED TO TRAFFIC -OTHER HAZARDS EXPOSED (IE EQUIPMENT, MATERIALS)	PVH+TMIA	PVL	SEE NOTE 2
SHOULDER CLOSURE OR ENCROACHMENT	WORKERS ON FOOT OR WORK VEHICLE EXPOSED TO TRAFFIC	PVH+TMIA	PVL	PVL
SHOULDER CLOSURE OR ENCROACHMENT	-NO WORKERS ON FOOT -NO WORK VEHICLE EXPOSED TO TRAFFIC -OTHER HAZARDS EXPOSED (IE EQUIPMENT, MATERIALS, EXCAVATION)	PVH+TMIA	PVL	SEE NOTE 2

LEGEND
PVL - PROTECTIVE VEHICLE LIGHT (MINIMUM GROSS WEIGHT 9,500 LBS. OR GREATER) (SEE NOTE 4)
PVH - PROTECTIVE VEHICLE HEAVY (MINIMUM GROSS WEIGHT 22,000 LBS. OR GREATER)
TMIA - TRUCK/TRAILER MOUNTED IMPACT ATTENUATOR

NOTES
1. THE EXPOSURE CONDITIONS ASSUME THERE IS NO POSITIVE PROTECTION PRESENT.
2. EITHER A PROTECTIVE LIGHT (PVL) OR THE STANDARD BUFFER SPACE (SEE TABLE 011-03 SHALL BE PROVIDED.
3. TRUCK/TRAILER MOUNTED IMPACT ATTENUATORS (TMIA) SHALL NOT BE MOUNTED/INSTALLED ON VEHICLES WITH A GROSS VEHICLE WEIGHT (GVW) LESS THAN WHAT IS MINIMALLY REQUIRED BY THE MANUFACTURER OF THE TMIA.
4. THE USE OF A PROTECTIVE VEHICLE LIGHT (PVL) AS A SHADOW VEHICLE IS LIMITED TO NON-FREEWAY ROADWAYS WHERE THE POSTED SPEED LIMITS IS ≤ 40 MPH UNLESS OTHERWISE AUTHORIZED BY THE ENGINEER.

TABLE 311-02: LONGITUDINAL BUFFER SPACE AND TAPER LENGTHS

PRECONSTRUCTION POSTED SPEED LIMIT (MPH)	LONGITUDINAL BUFFER SPACE DISTANCE (FT.)/ # OF SKIP LINES	TAPER LENGTHS (FT.)/ * OF SKIP LINES/ * OF CHANNELIZING DEVICES			SHOULDER TAPER LENGTHS (FT.)/ * OF SKIP LINES/ * OF CHANNELIZING DEVICES						
		LATERAL SHIFT OF TRAFFIC FLOW PATH (FT.)			FOR SHOULDER WIDTH						
		10	11	12	≤ 4 FT.	5 - 7 FT.	8 FT.	9 FT.	10 FT.	11 FT.	12 FT.
25	155 / 4	120/3/4	120/3/4	120/3/4	40/1/2	40/1/2	40/1/2	40/1/2	40/1/2	40/1/2	40/1/2
30	200 / 5	160/4/5	160/4/5	200/5/6	40/1/2	40/1/2	40/1/2	40/1/2	80/2/3	80/2/3	80/2/3
35	250 / 6	200/5/6	240/6/7	240/6/7	40/1/2	40/1/2	80/2/3	80/2/3	80/2/3	80/2/3	80/2/3
40	305 / 8	280/7/8	320/8/9	320/8/9	40/1/2	80/2/3	80/2/3	80/2/3	120/3/4	120/3/4	120/3/4
45	360 / 9	440/11/12	520/13/14	560/14/15	80/2/3	80/2/3	120/3/4	120/3/4	120/3/4	120/3/4	160/4/5
50	425 / 11	520/13/14	560/14/15	600/15/16	80/2/3	120/3/4	160/4/5	160/4/5	160/4/5	160/4/5	160/4/5
55	495 / 13	560/14/15	600/15/16	680/17/18	80/2/3	120/3/4	160/4/5	160/4/5	160/4/5	200/5/6	200/5/6

TABLE 311-03: ADVANCE WARNING SIGN SPACING

ROAD TYPE	DISTANCE BETWEEN SIGNS			SIGN LEGEND	
	A (FT.)	B (FT.)	C (FT.)	XX	YY
URBAN (≤ 30 MPH*)	100	100	100	AHEAD	AHEAD
URBAN (35-40 MPH*)	200	200	200	AHEAD	AHEAD
URBAN (≥ 45 MPH*)	350	350	350	1000 FT.	AHEAD
RURAL	500	500	500	1500 FT.	1000 FT.

* PRECONSTRUCTION POSTED SPEED LIMIT

TABLE 311-04: ROLL AHEAD DISTANCE FOR PROTECTIVE VEHICLES

PRECONSTRUCTION POSTED SPEED LIMIT (MPH)	ROLL AHEAD DISTANCE (FT.)/* OF SKIP LINES FOR VEHICLES	
	STATIONARY OPERATION	
	PROTECTIVE VEHICLES WEIGHING 9,500 TO 21,999 LBS. GVW	PROTECTIVE VEHICLES WEIGHING 22,000 LBS. OR GREATER GVW
≥ 60	200/5	160/4
45 - 55	160/4	120/3
≤ 40	120/3	80/2

TABLE 311-05: REQUIRED SIGN SIZES*

SIGN	NON-FREEWAY	FREEWAY
G20-2	36x18	48x24
NYW8-33	48x24	48x24
W4-2R	36x36	48x48
W20-1	36x36	48x48
W20-5R	36x36	48x48
WARNING FLAG	18x18	18x18

*FREEWAY SIZES MAY BE USED ON NON-FREEWAY, IF SPACE CONSTRAINTS DO NOT EXIST.

NEW YORK STATE OF OPPORTUNITY. Department of Transportation

U.S. CUSTOMARY STANDARD SHEET

WORK ZONE TRAFFIC CONTROL
MULTILANE UNDIVIDED ROADWAY
RIGHT LANE CLOSURE
SHORT TERM OPERATION
(SHEET 2 OF 2)

APPROVED DECEMBER 2, 2021 — ISSUED UNDER EI 21-028

Robert Limoges
ROBERT LIMOGES, P.E.
DIRECTOR, OTSM

619-311

FILE NAME = 619-311-2.dgn
DATE/TIME = 18-JUN-2023 12:15
USER = rfoote

DRAWING NAME:
NYSDOT
Standard Sheets

DRAWING NO.
M-101

Project No: 23-4091

Date: 4/22/24
Drawn By: P. Shendy
Scale: As Noted

REVISIONS:

No.	Description	Date
1	Added per DOT comments	11/1/24

Proposed Multi-Family

4774 & 4780 Sheridan Drive
Amherst, NY

CARMINAWOOD DESIGN
Buffalo | Utica | Greensboro

GENERAL NOTES

1. THE TYPICAL DETAILS DEPICTED ON THE STANDARD SHEETS AND IN THE MUTCD, REFLECT THE MINIMUM REQUIREMENTS.
2. PROPOSED REVISIONS TO THE TRAFFIC CONTROL PLAN SHALL BE PROVIDED, IN WRITING, TO THE DOT ENGINEER FOR REVIEW AND APPROVAL BY THE REGIONAL DIRECTOR OR HIS/HER DESIGNEE FIVE (5) WORK DAYS PRIOR TO THE PLANNED IMPLEMENTATION OF SUCH PROPOSED REVISIONS, EXCEPT FOR CHANGES THAT ALTER THE SCOPE OF THE TRAFFIC CONTROL PLAN. SUCH CHANGES IN SCOPE MUST BE SUBMITTED TO THE ENGINEER FOR APPROVAL BY THE REGIONAL DIRECTOR OR HIS/HER DESIGNEE THIRTY (30) WORK DAYS PRIOR TO IMPLEMENTATION OF SUCH REVISIONS.
3. THE NAMES, ADDRESSES, AND TELEPHONE NUMBERS OF STAFF WHO ARE AUTHORIZED TO SECURE LABOR, MATERIALS, AND EQUIPMENT FOR EMERGENCY REPAIRS OUTSIDE NORMAL WORKING HOURS SHALL BE PROVIDED, IN WRITING, TO THE NYSDOT ENGINEER. THE ENGINEER WILL PROVIDE THE SUBMITTED INFORMATION TO REGIONAL MANAGEMENT, THE NEW YORK STATE POLICE, THE RESIDENT ENGINEER, AND THE LOCAL POLICE.
4. STANDARD SHEET 619-503 MAY BE USED FOR AN OFFSITE DETOUR SETUP FOR BOTH LONG TERM AND SHORT TERM WORK DURATIONS.
5. REGIONAL HIGH-VOLUME RESTRICTIONS SHALL BE FOLLOWED. CONSULT WITH DOT ENGINEER IF EXCEPTION NEEDED.
6. PLAN AHEAD TO AVOID CONFLICTING WORK ZONES. CHECK FOR CONSTRUCTION PROJECTS, CLOSURES, & RESTRICTIONS AT WWW.511NY.ORG, WWW.DOT.NY.GOV/PROJECTS, AND WITH NYSDOT ENGINEER.
7. WORK ZONE INCIDENTS SHALL BE DOCUMENTED AND REPORTED USING EITHER THE DEPARTMENT'S WORK ZONE INCIDENT FORM, OR THE CONSTRUCTION INCIDENT REPORTING SYSTEM, AS APPROPRIATE.
8. CONSIDER CLOSURE WIDTH AND THE ABILITY TO ACCOMMODATE WIDE LOAD VEHICLES BEFORE ESTABLISHING WORK ZONES.
9. IF THE WORK ZONE AFFECTS AN EXISTING ACCESSIBLE AND DETECTABLE PEDESTRIAN FACILITY, ACCESSIBILITY AND DETECTABILITY SHALL BE PROVIDED ALONG THE ALTERNATE ROUTE.

ACTIVITY AREA

1. A 500' MINIMUM LONGITUDINAL DISTANCE SHALL BE MAINTAINED BETWEEN CONSTRUCTION OPERATIONS ON ALTERNATE SIDES OF THE ROADWAY, UNLESS OTHERWISE APPROVED BY THE ENGINEER.
2. WHEN TWO OR MORE AREAS ARE ADJACENT, OVERLAP, OR ARE IN CLOSE PROXIMITY, THE CONTRACTOR SHALL ENSURE THERE ARE NO CONFLICTING SIGNS AND THAT LANE CONTINUITY IS MAINTAINED THROUGHOUT ALL WORK AREAS.

SIGNS

1. THE LOCATIONS OF THE SIGNS SHOWN ON THE WORK ZONE TRAFFIC CONTROL PLANS AND DETAILS MAY BE ADJUSTED BASED ON SIGHT DISTANCE AND OTHER CONSIDERATIONS. THE FINAL LOCATIONS OF SIGNS ARE SUBJECT TO APPROVAL OF THE ENGINEER.
2. FOR LONG TERM WORK DURATIONS, ANY EXISTING SIGNS, INCLUDING OVERHEAD SIGNS, WHICH CONFLICT WITH THE TEMPORARY TRAFFIC CONTROL SIGN LAYOUT SHALL BE COVERED, REMOVED, STORED OR RESET, AS APPROVED BY THE ENGINEER. ALL APPROPRIATE EXISTING SIGNS SHALL BE RESTORED TO THEIR ORIGINAL CONDITION AND/OR LOCATION UNLESS OTHERWISE REPLACED IN THIS CONTRACT.
3. SIGNS AT OR NEAR INTERSECTIONS SHALL BE PLACED SO THAT THEY DO NOT OBSTRUCT A MOTORIST'S LINE OF SIGHT.
4. SIGNS MOUNTED ON THE MEDIAN OF DIVIDED HIGHWAYS WHERE MEDIAN BARRIER IS IN PLACE MAY BE MOUNTED ON THE BARRIER WITH A SADDLE TYPE BRACKET OR OMITTED WITH THE APPROVAL OF THE DOT ENGINEER. LAYING THE SIGN DOWN IN A HORIZONTAL POSITION IS NOT PERMITTED.
5. THE DIMENSIONS OF WORK ZONE TRAFFIC CONTROL SIGNS ARE DESCRIBED IN THE MUTCD. ANY CHANGES TO THE DIMENSIONS SHALL BE APPROVED BY THE REGIONAL DIRECTOR OR BY HIS/HER DESIGNEE.
6. NYR9-12 SHALL BE USED IN PLACE OF NYR9-11 WHEN A REDUCED REGULATORY SPEED LIMIT SIGN IS AUTHORIZED.
7. RIGID AND FLEXIBLE "ROLL-UP" SIGNS MAY BE USED FOR MOBILE, SHORT DURATION AND SHORT-TERM STATIONARY WORK. RIGID SIGNS MUST BE MOUNTED AT LEAST 5 FEET ABOVE GRADE IF FEET WHERE THERE ARE PEDESTRIANS OR PARKED CARS). FLEXIBLE SIGNS SHALL BE MOUNTED AT LEAST ONE FOOT ABOVE GRADE. MESH SIGNS SHALL NOT BE USED. USE RETRO REFLECTORIZED RIGID SIGNS FOR NIGHTTIME WORK.

LANE WIDTHS

1. UNLESS AUTHORIZED BY THE ENGINEER, THE MINIMUM LANE WIDTHS FOR WORK ZONE TRAVEL LANES SHALL BE AS FOLLOWS: FREEWAYS AND/OR EXPRESSWAYS IS 11'. THE MINIMUM LANE WIDTH FOR ALL OTHER TYPES OF ROADWAYS IS 10'.
2. A WRITTEN NOTE SHALL BE PROVIDED TO THE ENGINEER, A MINIMUM OF 21 CALENDAR DAYS IN ADVANCE OF PERFORMING ANY WORK THAT RESULTS IN THE REDUCED WIDTH OF AN EXISTING ROADWAY, SO THAT THE ENGINEER MAY NOTIFY THE REGIONAL PERMIT ENGINEER IN A TIMELY MANNER.
3. IF THE WORK ZONE AFFECTS PEDESTRIANS, A MINIMUM PEDESTRIAN PATHWAY WIDTH OF 5 FEET SHALL BE MAINTAINED UNLESS OTHERWISE AUTHORIZED BY THE ENGINEER.
4. TEMPORARY BICYCLE ACCOMMODATIONS SHALL NOT BE LESS THAN WHAT CURRENTLY EXISTS UNLESS AUTHORIZED BY THE ENGINEER.

PROTECTIVE VEHICLES

1. PROTECTIVE VEHICLES ARE DIVIDED INTO 2 CATEGORIES BASED ON THE GROSS VEHICLE WEIGHT (GVWR)

   - PROTECTIVE VEHICLE LIGHT (PVL) SHALL HAVE A MINIMUM GVW OF 9,500 LBS. OR GREATER.

   - PROTECTIVE VEHICLE HEAVY (PVH) SHALL HAVE A MINIMUM GVW OF 22,000 LBS. OR GREATER.
2. IF THE PROTECTIVE VEHICLE ENCROACHES INTO THE TRAVEL LANE, OR IF IT REMAINS ENTIRELY ON THE SHOULDER OF ANY HIGH SPEED ROAD (45 MPH), IT SHALL BE EQUIPPED WITH A DEPLOYED TRUCK/TRAILER MOUNTED IMPACT ATTENUATOR (TMIA, SEE TABLE 011-01 ON SHEET 619-011). BALLAST MAY BE USED TO BRING A LIGHTER VEHICLE UP TO THE INDICATED WEIGHT PROVIDED THE BALLAST IS SECURELY CONTAINED WITHIN AN ENCLOSED BODY OR OTHERWISE SECURELY FASTENED TO THE VEHICLE PURSUANT TO FEDERAL MOTOR CARRIER SAFETY ADMINISTRATION (FMCSA) CARGO SECUREMENT RULES, SUCH THAT:

   - THE BALLAST WILL NOT SEPARATE FROM THE VEHICLE UPON IMPACT AND

   - THE BALLAST WEIGHT WILL NOT EXCEED THE MANUFACTURER'S GROSS VEHICLE WEIGHT RATING (GVWR).

   - TRUCK/TRAILER MOUNTED IMPACT ATTENUATORS SHALL NOT BE MOUNTED/INSTALLED ON VEHICLES WITH A GROSS WEIGHT (GVW) LESS THAN WHAT IS MINIMALLY REQUIRED BY THE MANUFACTURER OF THE TMIA.
3. WHEN A PROTECTIVE VEHICLE(S) IS USED BETWEEN THE WORK VEHICLE (CREW) OR HAZARD AND THE TRAFFIC IN A MOVING OPERATION IT IS REFERRED TO AS A SHADOW VEHICLE(S).
4. WHEN A PROTECTIVE VEHICLE(S) IS USED BETWEEN THE WORK VEHICLE (CREW) OR HAZARD AND THE TRAFFIC IN A STATIONARY OPERATION IT IS REFERRED TO AS A BARRIER VEHICLE(S).
5. WHEN A PROTECTIVE VEHICLE IS USED IN ADVANCE OF EITHER MOVING OR STATIONARY OPERATIONS TO DISPLAY SIGN MESSAGES IT IS REFERRED TO AS AN ADVANCE WARNING VEHICLE. WHEN SIGNS ARE MOUNTED ON AN ADVANCED WARNING VEHICLE, THEY SHALL NOT OBSTRUCT VISIBILITY OF ANY LIGHTS (TAILLIGHTS OR WARNING LIGHTS), OR SIDE-VIEW MIRRORS ON THE VEHICLE, OR TRUCK MOUNTED ARROW BOARDS.
6. IN A MOVING OPERATION OR A STATIONARY OPERATION THAT OCCUPIES A LOCATION FOR UP TO 1 HOUR, THE OPERATOR SHALL REMAIN IN THE PROTECTIVE VEHICLE WITH THE SAFETY BELT AND HEADREST PROPERLY ADJUSTED, MAINTAIN VEHICLE SPACING, AND KEEP THE WHEELS ALIGNED WITH THE LANE STRIPING AND LANE TO MAINTAIN LANE DISCIPLINE AND TO STAY IN LANE IF STRUCK. THE PARKING BRAKE SHALL BE SET WHENEVER POSSIBLE. TWO-WAY RADIOS SHOULD BE USED TO COMMUNICATE BETWEEN THE OPERATOR AND THE WORK CREW.
7. IN A STATIONARY OPERATION THAT OCCUPIES A LOCATION FOR MORE THAN 1 HOUR, ONCE THE PROTECTIVE VEHICLE HAS BEEN APPROPRIATELY PLACED, IT SHOULD BE UNOCCUPIED. UNOCCUPIED VEHICLE SHALL BE POSITIONED PARALLEL TO TRAFFIC, PARKING BRAKE SET, PLACED IN 2ND GEAR (MANUAL TRANSMISSIONS) /ENGINE OFF) OR PARK / NEUTRAL (AUTOMATIC TRANSMISSIONS). THE FRONT WHEELS SHALL BE ALIGNED WITH THE LANE STRIPING AND LANE TO MAINTAIN LANE DISCIPLINE AND TO STAY IN LANE IF STRUCK.
8. NO WORK ACTIVITY, EQUIPMENT, VEHICLES AND/OR MATERIALS SHALL BE LOCATED BETWEEN THE PROTECTIVE VEHICLE AND THE ACTIVE WORK AREA (ROLL AHEAD DISTANCE).
9. DIRECT VERBAL COMMUNICATION BETWEEN THE PROTECTIVE VEHICLES AND THE WORK VEHICLE(S) / EQUIPMENT SHALL BE UTILIZED WHERE AVAILABLE.

CHANNELIZING DEVICES

1. WHERE POSSIBLE ALL CHANNELIZING AND GUIDING DEVICES ARE TO BE PLACED SO AS TO PROVIDE A MINIMUM 2' LATERAL CLEARANCE TO THE TRAVELED WAY.
2. A DROP-OFF OF GREATER THAN 24 INCHES WITHIN 10 FEET FROM THE EDGE OF THE TRAVELED WAY TO REMAIN AT THE END OF THE WORK SHIFT SHALL BE SEPARATED FROM TRAFFIC WITH POSITIVE BARRIER. FOR POSTED SPEED LIMIT OF 45 MPH AND LESS, A DROP-OFF OF GREATER THAN 24 INCHES WITHIN 10 FEET FROM THE EDGE OF THE TRAVELED WAY THAT IS 100 FEET OR LESS IN LENGTH WILL BE ALLOWED WITH CHANNELIZING DEVICES CONSISTING OF DRUMS, EXTRA TALL CONES, OR OVERSIZED VERTICAL PANELS ONLY AT A MAXIMUM SPACING OF 20 FEET FOR SHORT DURATIONS NOR TO EXCEED ONE WORK SHIFT.
3. TEMPORARY POSITIVE BARRIER MAY BE SUBSTITUTED WITH DRUM CHANNELIZING DEVICES, IN SOME CIRCUMSTANCES, WITH APPROVAL OF THE REGIONAL TRAFFIC ENGINEER BASED ON GUIDANCE FOUND IN THE HIGHWAY DESIGN MANUAL AND ENGINEERING JUDGEMENT.

PUBLIC ACCESS

1. PROPERTY OWNERS WHOSE DRIVEWAYS WILL BE MADE INACCESSIBLE SHALL BE NOTIFIED AT LEAST 24 HOURS PRIOR TO RESTRICTING USE OF THE DRIVEWAY. FOR MULTIPLE ACCESS PROPERTIES, AT LEAST ONE DRIVEWAY SHALL BE OPEN AT ALL TIMES. ACCESS SHALL BE RESTORED TO ALL DRIVEWAYS AS SOON AS POSSIBLE.
2. SUITABLE RAMPS SHALL BE INSTALLED TO MAINTAIN SMOOTH TRANSITIONS FROM RESIDENTIAL AND COMMERCIAL DRIVEWAYS TO AND FROM THE WORK AREA.

LANE CLOSURES

1. LANE CLOSURES SHALL BE LOCATED TO PROVIDE OPTIMUM VISIBILITY, I.E. BEFORE CURVES AND CRESTS, TO THE EXTENT CONDITIONS PERMIT.
2. THE ENGINEER MAY REQUIRE THAT ALL LANES BE RE-OPENED AT ANY TIME IF THE ROUTE IS NEEDED FOR EMERGENCY PURPOSES. THIS COULD INCLUDE INCIDENTS AT LOCATIONS OUTSIDE THE CONTRACT LIMITS.
3. EACH ARROW PANEL SHALL BE VISIBLE 1500 FEET IN ADVANCE FROM ANY POINT WITHIN THE ROADWAY.

TOLERANCE NOTE

1. ALL DIMENSIONS ON ANY 619 STANDARD SHEET ARE NOMINAL.

   - WHEN A DECIMAL POINT WITH SIGNIFICANT DIGIT(S) TO THE RIGHT OF IT IS/ARE PRESENT-TOLERANCE FOR EACH DIMENSION IS ONE HALF OF THE LAST SIGNIFICANT DIGIT IN THE UNITS SHOWN. (e.g. 1.0' IS 0.05' & 1.00' IS 0.005").

   - OTHERWISE, TOLERANCE FOR EACH DIMENSION IS THE LESSER OF 10% OF THE NOMINAL DIMENSION SHOWN OR 6" (e.g. TOLERANCE FOR 3' IS 3.6" & TOLERANCE FOR 10' IS 6").
2. TOLERANCE ARE NOT CUMULATIVE. ABOVE DOES NOT APPLY WHEN ANY RANGE, MAXIMUM OR MINIMUM DIMENSION OR A CONTEXT SPECIFIC TOLERANCE IS SPECIFIED.

FILE NAME = 619-010-1 E3.dgn
DATE/TIME = 02-MAY-2024 18:11
USER = skurtgi

ERRATA 3 EFF. 05/01/24 ISSUED WITH EB 24-007	NEW YORK STATE OF OPPORTUNITY. Department of Transportation
ERRATA 2 EFF. 09/01/23 ISSUED WITH EB 23-016	U.S. CUSTOMARY STANDARD SHEET
ERRATA 1 EFF. 05/01/23 ISSUED WITH EB 22-033	WORK ZONE TRAFFIC CONTROL GENERAL NOTES (SHEET 1 OF 2)
	APPROVED DECEMBER 21, 2022 — ROBERT LIMOGES, P.E. DIRECTOR, OTSM — ISSUED UNDER EI 22-033 — 619-010

WORK DURATION DEFINITIONS

1. THERE ARE MAINLY FIVE WORK DURATIONS:
   - A. LONG-TERM IS STATIONARY WORK THAT OCCUPIES A LOCATION MORE THAN 3 CONSECUTIVE DAYS.
   - B. INTERMEDIATE-TERM IS STATIONARY WORK THAT OCCUPIES A LOCATION MORE THAN ONE DAYLIGHT PERIOD UP TO 3 CONSECUTIVE DAYS, OR NIGHTTIME WORK LASTING MORE THAN 1 HOUR.
   - C. SHORT-TERM IS STATIONARY DAYTIME WORK THAT OCCUPIES A LOCATION FOR MORE THAN 1 HOUR WITHIN A SINGLE DAYLIGHT PERIOD.
   - D. SHORT DURATION IS WORK THAT OCCUPIES A LOCATION UP TO 1 HOUR. IT CAN BE PERFORMED DURING THE DAYTIME OR AT NIGHT IN ACCORDANCE WITH NOTES N1 TO N11 NOTES ON NIGHTTIME WORK.
   - E. MOBILE IS WORK THAT MOVES INTERMITTENTLY OR CONTINUOUSLY WHERE THE WORK AT ANY SPECIFIC LOCATION COMPLETES WITHIN 15 MINUTES. IT IS USED FOR VEHICLE BASED OPERATIONS AND DOES NOT INVOLVE WORKERS ON FOOT. IT CAN BE PERFORMED DURING THE DAYTIME OR AT NIGHT IN ACCORDANCE WITH NOTES N1 TO N10 NOTES ON NIGHTTIME WORK.
2. SPECIAL OPERATIONS ARE WORK OPERATIONS THAT DO NOT FIT INTO ONE OF THE ABOVE FIVE CATEGORIES. SPECIAL OPERATIONS INCLUDE:
   - A. STOP AND GO OPERATIONS - WORK THAT COMPLETES WITHIN 5 MINUTES AND ALLOWS WORKERS ON FOOT.
   - B. OTHER OPERATIONS INCLUDING MOWING, MULCHING/HERBICIDE OPERATIONS, TEMPORARY ROAD/INTERSECTION CLOSURES, ETC.

ROADWAY TYPE DEFINITIONS

1. FREEWAY:
   - A. INTERSTATE: INTERREGIONAL HIGH-SPEED, HIGH-VOLUME, DIVIDED FACILITIES WITH COMPLETE CONTROL OF ACCESS.
   - B. PARKWAY: DIVIDED HIGHWAYS FOR NON-COMMERCIAL TRAFFIC WITH FULL CONTROL OF ACCESS, GRADE PARKWAY SEPARATIONS, INTERCHANGES, AND OCCASIONAL AT-GRADE INTERSECTIONS. PARKWAYS ARE DESIGNATED BY LAW.
2. EXPRESSWAY: DIVIDED HIGHWAYS FOR THROUGH TRAFFIC WITH FULL OR PARTIAL CONTROL OF ACCESS AND GENERALLY WITH GRADE SEPARATIONS AT MAJOR CROSSROADS. ALL FREEWAY STANDARD SHEETS ARE APPLICABLE TO EXPRESSWAY.
3. NON-FREEWAY:
   - A. MULTILANE DIVIDED HIGHWAY
   - B. MULTILANE UNDIVIDED HIGHWAY
   - C. TWO-LANE TWO-WAY ROADWAY

ALL NON-FREEWAYS CAN BE EITHER URBAN OR RURAL:

URBAN: (MEETS MORE THAN 1 OF THE FOLLOWING CRITERIA)
- *HIGH DENSITY DEVELOPMENT
- *ON-STREET PARKING
- *VARIED BUILDING SETBACKS
- *MULTI-STORY AND LOW-TO MEDIUM-RISE STRUCTURES FOR RESIDENTIAL
- *COMMERCIAL, AND EDUCATIONAL USES, STRUCTURES THAT ACCOMMODATE MIXED USES: COMMERCIAL, RESIDENTIAL, AND PARKING
- *LIGHT INDUSTRIAL, AND SOMETIMES HEAVY INDUSTRIAL, LAND USE
- *PROMINENT DESTINATIONS WITH SPECIALIZED STRUCTURES, E.G., LARGE THEATERS, SPORTS FACILITIES OR CONFERENCE CENTERS
- *HIGH LEVELS OF PEDESTRIAN AND BICYCLIST ACTIVITY, WITH NEARLY CONTINUOUS SIDEWALKS AND MARKED CROSSWALKS
- *HIGHER DENSITY OF TRANSIT STOPS AND ROUTES
- *DRIVEWAY DENSITIES GREATER THAN 25 DRIVEWAYS/MILE ON EACH SIDE OF THE ROAD
- *MINOR COMMERCIAL DRIVEWAY DENSITIES OF 10 DRIVEWAYS/MILE OR GREATER
- *MAJOR COMMERCIAL DRIVEWAYS
- *HIGH DENSITY OF CROSS STREETS

RURAL: DOES NOT MEET MORE THAN ONE OF THE ABOVE CRITERIA.

NOTES FOR NIGHTTIME OPERATIONS:

N1. WORK OCCURRING AFTER SUNSET AND BEFORE SUNRISE WILL BE CONSIDERED NIGHTTIME OPERATIONS.

N2. ALL SIGNS, STOP/SLOW PADDLES AND RED FLAGS USED TO WARN/ALERT/CONTROL TRAFFIC SHALL BE RETROREFLECTIVE.

N3. ALL WORKERS INVOLVED SHALL WEAR PROTECTIVE HELMETS AND NIGHTTIME APPAREL IN ACCORDANCE WITH §107-09A. HIGH VISIBILITY APPAREL AT ALL TIMES.

N4. VEHICLES OPERATING ON THE PAVEMENT OF A CLOSED ROADWAY OR TRAVEL LANE SHALL DISPLAY ROTATING AMBER BEACONS OR FLASHING LED BEACONS AT ALL TIMES.

N5. LEVEL I ILLUMINATION SHALL BE PROVIDED NEAR THE BEGINNING OF LANE CLOSURE TAPERS AND AT ROAD CLOSURES, INCLUDING THE SETUP AND REMOVAL OF THE CLOSURE TAPERS.

N6. LEVEL II ILLUMINATION SHALL BE PROVIDED FOR FLAGGING STATIONS, ASPHALT PAVING, MILLING, AND CONCRETE PLACEMENT AND/OR REMOVAL OPERATIONS, INCLUDING BRIDGE DECKS, 50 FEET AHEAD OF AND 100 FEET BEHIND A PAVING OR MILLING MACHINE.

N7. LEVEL III ILLUMINATION SHALL BE PROVIDED FOR PAVEMENT OR STRUCTURAL CRACK FILLING, JOINT REPAIR, PAVEMENT PATCHING AND REPAIRS, INSTALLATION OF SIGNAL EQUIPMENT OR OTHER ELECTRICAL/MECHANICAL EQUIPMENT, AND OTHER TASKS INVOLVING FINE DETAILS OR INTRICATE PARTS AND EQUIPMENT.

N8. ALL LIGHTING SHALL BE DESIGNED, INSTALLED, AND OPERATED TO AVOID GLARE THAT AFFECTS TRAFFIC ON THE ROADWAY OR THAT CAUSES ANNOYANCE OR DISCOMFORT FOR RESIDENCES ADJOINING THE ROADWAY.

N9. PRIOR TO THE START OF NIGHTTIME OPERATIONS, A WRITTEN NIGHTTIME OPERATIONS AND LIGHTING PLAN IS REQUIRED FOR APPROVAL FROM THE DOT ENGINEER.

N10. SEE STANDARD SPECIFICATIONS §619 FOR ADDITIONAL REQUIREMENTS AND CONSIDERATIONS. REFER TO SECTION 619-3.19B FOR BALLOON LIGHTING REQUIREMENTS.

N11. FLAGGERS SHALL USE A FLASHLIGHT WITH RED GLOW CONE/RED LED BATON FOR FLAGGING IN NON-ILLUMINATED FLAGGER STATIONS DURING NIGHTTIME OPERATIONS.

FILE NAME = 619-010-2 E3.dgn
DATE/TIME = 02-MAY-2024 18:11
USER = skurtgi

ERRATA 1 eff. 09/01/23 ISSUED WITH EB 23-016	NEW YORK STATE OF OPPORTUNITY. Department of Transportation
	U.S. CUSTOMARY STANDARD SHEET
	WORK ZONE TRAFFIC CONTROL GENERAL NOTES (SHEET 2 OF 2)
	APPROVED DECEMBER 21, 2022 — ROBERT LIMOGES, P.E. DIRECTOR, OTSM — ISSUED UNDER EI 22-033 — 619-010

Project No: 23-4091

M-102

Date: 4/22/24
Drawn By: P. Shendy
Scale: As Noted
DRAWING NO.

DRAWING NAME: NYSDOT Standard Sheets

STATE OF NEW YORK — LICENSED PROFESSIONAL ENGINEER — 070180

REVISIONS:

No.	Description	Date
1	Added per DOT comments	11/1/24

Proposed Multi-Family
4774 & 4780 Sheridan Drive
Amherst, NY

CARMINAWOOD DESIGN
Buffalo | Utica | Greensboro

WORK ZONE TRAFFIC CONTROL LEGEND	
SYMBOL	DESCRIPTION
	ARROW PANEL
	ARROW PANEL, CAUTION MODE
	ARROW PANEL TRAILER OR SUPPORT
	CHANGEABLE MESSAGE SIGN (PVMS)
	CHANNELIZING DEVICE
	CONE
	CRASH CUSHION/TEMPORARY IMPACT ATTENUATOR
	DIRECTION OF TEMPORARY TRAFFIC DETOUR
	DIRECTION OF TRAFFIC
	AUTOMATED FLAGGER ASSISTANCE DEVICE WITH OPERATOR
	FLAGGER
	FLAG TREE
	LUMINAIRE
	MOWER
	PARKWAY GRASS SHOULDER
	PAVEMENT MARKINGS THAT SHALL BE REMOVED FOR A LONG TERM PROJECT
PVMS	PORTABLE VARIABLE MESSAGE SIGN
	ORANGE FLAGS (MIN. 18" X 18")
	TRAILER FOR ARROW PANEL OR PORTABLE VARIABLE MESSAGE SIGN (PVMS)

WORK ZONE TRAFFIC CONTROL LEGEND	
SYMBOL	DESCRIPTION
	SIGN, TEMPORARY
	SPOTTER
	TEMPORARY POSITIVE BARRIER
	TEMPORARY POSITIVE BARRIER WITH WARNING LIGHTS
	TEMPORARY TRAFFIC SIGNAL HEAD
	TYPE III BARRICADE
	WARNING LIGHTS
	WORK AREA
	WORK VEHICLE
	WORK VEHICLE (MULCHING/HERBICIDE OPERATION)
	WORK VEHICLE (PAVEMENT MARKING)
	WORK VEHICLE (SIGNAL WORK)
PV	PROTECTIVE VEHICLE
PVL	PROTECTIVE VEHICLE LIGHT
PVH	PROTECTIVE VEHICLE HEAVY
	TRUCK/TRAILER MOUNTED IMPACT ATTENUATOR (TMIA)

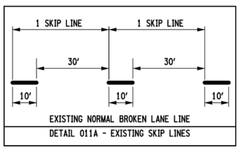

EXISTING NORMAL BROKEN LANE LINE

DETAIL 011A - EXISTING SKIP LINES

FILE NAME = 619-011-1.2.dgn
DATE/TIME = 05-APR-2024 13:58
USER = skurogi

NEW YORK STATE OF OPPORTUNITY. Department of Transportation

U.S. CUSTOMARY STANDARD SHEET

WORK ZONE TRAFFIC CONTROL
GENERAL TABLES AND LEGEND
(SHEET 1 OF 2)

ERRATA 2 EFF. 09/01/23
ISSUED WITH EB 23-016

ERRATA 1 EFF. 05/01/2023
ISSUED WITH EB 22-033

APPROVED DECEMBER 21, 2022
Robert Limoges
ROBERT LIMOGES, P.E.
DIRECTOR, OTSM

ISSUED UNDER EI 22-033

619-011

TABLE 011-01: PROTECTIVE VEHICLE REQUIREMENTS[A,B]

CLOSURE TYPE	DURATION	MOBILE OPERATION AND STOP & GO				SHORT DURATION OPERATION				SHORT TERM OPERATION				INTERMEDIATE TERM OPERATION				LONG TERM OPERATION			
	ROAD TYPE & SPEED	FREEWAY	NON-FREEWAY			FREEWAY	NON-FREEWAY			FREEWAY	NON-FREEWAY			FREEWAY	NON-FREEWAY			FREEWAY	NON-FREEWAY		
	EXPOSURE CONDITIONS (SEE NOTE 1)		≥ 45 MPH	35 - 40 MPH	≤ 30 MPH		≥ 45 MPH	35 - 40 MPH	≤ 30 MPH		≥ 45 MPH	35 - 40 MPH	≤ 30 MPH		≥ 45 MPH	35 - 40 MPH	≤ 30 MPH		≥ 45 MPH	35 - 40 MPH	≤ 30 MPH
LANE CLOSURE OR ENCROACHMENT	WORKERS ON FOOT OR WORK VEHICLE EXPOSED TO TRAFFIC	PVH+TMIA	PVH+TMIA	PVL+TMIA	PVL	PVH+TMIA	PVH+TMIA	PVL+TMIA	PVL	PVH+TMIA	PVH+TMIA	PVL+TMIA	PVL	PVH+TMIA	PVH+TMIA	PVL+TMIA	SEE NOTE 2	PVH+TMIA	PVH+TMIA	PVL+TMIA	SEE NOTE 2
	-NO WORKERS ON FOOT -NO WORK VEHICLE EXPOSED TO TRAFFIC -OTHER HAZARDS EXPOSED (IE EQUIPMENT, MATERIALS)					PVH+TMIA	PVH+TMIA	PVL	PVL	PVH+TMIA	PVH+TMIA	PVL	SEE NOTE 2	PVH+TMIA	PVH+TMIA	SEE NOTE 2	SEE NOTE 2	PVH+TMIA	PVH+TMIA	SEE NOTE 2	SEE NOTE 2
SHOULDER CLOSURE OR ENCROACHMENT	WORKERS ON FOOT OR WORK VEHICLE EXPOSED TO TRAFFIC	PVH+TMIA	PVH+TMIA	PVL+TMIA	PVL	PVH+TMIA	PVH+TMIA	PVL	PVL	PVH+TMIA	PVH+TMIA	PVL	PVL	PVH+TMIA	PVH+TMIA	SEE NOTE 2	SEE NOTE 2	PVH+TMIA	PVH+TMIA	SEE NOTE 2	SEE NOTE 2
	-NO WORKERS ON FOOT -NO WORK VEHICLE EXPOSED TO TRAFFIC -OTHER HAZARDS EXPOSED (IE EQUIPMENT, MATERIALS, EXCAVATION)					PVH+TMIA	PVH+TMIA	PVL	PVL	PVH+TMIA	PVH+TMIA	PVL	SEE NOTE 2	PVH+TMIA	SEE NOTE 3	SEE NOTE 2	SEE NOTE 2	PVH+TMIA	SEE NOTE 3	SEE NOTE 2	SEE NOTE 2

LEGEND
PVL - PROTECTIVE VEHICLE LIGHT (MINIMUM GROSS WEIGHT 9,500 LBS. OR GREATER) (SEE NOTE 5)
PVH - PROTECTIVE VEHICLE HEAVY (MINIMUM GROSS WEIGHT 22,000 LBS. OR GREATER)
TMIA - TRUCK/TRAILER MOUNTED IMPACT ATTENUATOR

A. THESE PROTECTIVE VEHICLE REQUIREMENTS ARE NOT APPLICABLE TO PAVING AND MILLING OPERATIONS. A STANDARD BUFFER SPACE SHALL BE PROVIDED FOR THESE OPERATIONS IN ACCORDANCE WITH TABLE 011-03.

B. THESE PROTECTIVE VEHICLE REQUIREMENTS ARE NOT APPLICABLE TO FLAGGING OPERATIONS. PROTECTIVE VEHICLES WITH APPROPRIATE ROLL AHEAD DISTANCE MAY BE USED IN ADVANCE OF THE WORK AREA IF DEEMED NECESSARY BY THE DOT ENGINEER AND THEIR DESIGNEE.

NOTES
1. THE EXPOSURE CONDITIONS ASSUME THERE IS NO POSITIVE PROTECTION PRESENT.
2. EITHER A PROTECTIVE LIGHT (PVL) OR THE STANDARD BUFFER SPACE (SEE TABLE 011-03 SHALL BE PROVIDED.
3. EITHER A PROTECTIVE VEHICLE HEAVY (PVH) OR THE STANDARD BUFFER SPACE (SEE TABLE 011-03) SHALL BE PROVIDED.
4. TRUCK/TRAILER MOUNTED IMPACT ATTENUATORS (TMIA) SHALL NOT BE MOUNTED/INSTALLED ON VEHICLES WITH A GROSS VEHICLE WEIGHT (GVW) LESS THAN WHAT IS MINIMALLY REQUIRED BY THE MANUFACTURER OF THE TMIA.
5. THE USE OF A PROTECTIVE VEHICLE LIGHT (PVL) AS A SHADOW VEHICLE IS LIMITED TO NON-FREEWAY ROADWAYS WHERE THE POSTED SPEED LIMITS IS ≤ 40 MPH UNLESS OTHERWISE AUTHORIZED BY THE ENGINEER.

TABLE 011-02: TAPER LENGTHS & NUMBER OF CONES CHART

PRECONSTRUCTION POSTED SPEED LIMIT (MPH)	TAPER LENGTH: (FT.)/ * OF SKIP LINES/ * OF CHANNELIZING DEVICES — LATERAL SHIFT OF TRAFFIC FLOW PATH (FT.)									SHOULDER TAPER LENGTH: (FT.)/ * OF SKIP LINES/ * OF CHANNELIZING DEVICES — FOR SHOULDER WIDTH						
	4	5	6	7	8	9	10	11	12	≤ 4 FT.	5 - 7 FT.	8 FT.	9 FT.	10 FT.	11 FT.	12 FT.
25	40/1/2	80/2/3	80/2/3	80/2/3	80/2/3	120/3/4	120/3/4	120/3/4	120/3/4	40/1/2	40/1/2	40/1/2	40/1/2	40/1/2	40/1/2	40/1/2
30	80/2/3	80/2/3	80/2/3	120/3/4	120/3/4	160/4/5	160/4/5	160/4/5	200/5/6	40/1/2	40/1/2	40/1/2	40/1/2	80/2/3	80/2/3	80/2/3
35	80/2/3	120/3/4	120/3/4	160/4/5	160/4/5	200/5/6	200/5/6	240/6/7	240/6/7	40/1/2	40/1/2	80/2/3	80/2/3	80/2/3	80/2/3	80/2/3
40	120/3/4	160/4/5	160/4/5	200/5/6	240/6/7	240/6/7	280/7/8	320/8/9	320/8/9	40/1/2	80/2/3	80/2/3	80/2/3	120/3/4	120/3/4	120/3/4
45	200/5/6	240/6/7	280/7/8	320/8/9	360/9/10	400/10/11	440/11/12	520/13/14	560/14/15	80/2/3	80/2/3	120/3/4	120/3/4	120/3/4	120/3/4	160/4/5
50	200/5/6	240/6/7	320/8/9	360/9/10	400/10/11	440/11/12	520/13/14	560/14/15	600/15/16	80/2/3	120/3/4	160/4/5	160/4/5	160/4/5	160/4/5	160/4/5
55	240/6/7	280/7/8	320/8/9	400/10/11	440/11/12	520/13/14	560/14/15	600/15/16	680/17/18	80/2/3	120/3/4	160/4/5	160/4/5	160/4/5	200/5/6	200/5/6
60	240/6/7	320/8/9	360/9/10	440/11/12	480/12/13	560/14/15	600/15/16	680/17/18	720/18/19	80/2/3	120/3/4	160/4/5	200/5/6	200/5/6	240/6/7	240/6/7
65	280/7/8	320/8/9	400/10/11	480/12/13	520/13/14	600/15/16	640/16/17	720/18/19	800/19/20	80/2/3	160/4/5	200/5/6	240/6/7	240/6/7	280/7/8	280/7/8

* THIS TABLE WAS CREATED WITH REFERENCE TO MUTCD TABLE 6H-4.
** THE NUMBER OF CHANNELIZING DEVICES SHOWN IS CALCULATED BASED ON A 40FT DEVICE SPACING. THE NUMBER OF CHANNELIZING DEVICES CAN BE ADJUSTED AS NECESSARY.

TABLE 011-03
LONGITUDINAL BUFFER SPACE

PRECONSTRUCTION POSTED SPEED LIMIT (MPH)	DISTANCE (FT.)/ * OF SKIP LINES
25	155 / 4
30	200 / 5
35	250 / 6
40	305 / 8
45	360 / 9
50	425 / 11
55	495 / 13
65	645 / 16

* THIS TABLE IS THE SAME AS MUTCD TABLE 6C-2.

TABLE 011-04: ROLL AHEAD DISTANCE FOR PROTECTIVE VEHICLES

PRECONSTRUCTION POSTED SPEED LIMIT (MPH)	ROLL AHEAD DISTANCE (FT.)/* OF SKIP LINES FOR VEHICLES — PROTECTIVE VEHICLES WEIGHING 9,500 TO 21,999 LBS. GVW		PROTECTIVE VEHICLES WEIGHING 22,000 LBS. OR GREATER GVW	
	STATIONARY OPERATION	MOVING OPERATION (15 MPH MAX.)	STATIONARY OPERATION	MOVING OPERATION (15 MPH MAX.)
≥ 60	200/5	240/6	160/4	200/5
45 - 55	160/4	200/5	120/3	160/4
≤ 40	120/3	120/3	80/2	120/3

TABLE 011-05
FLARE RATES FOR POSITIVE BARRIER

TYPE OF POSITIVE BARRIER	POSTED SPEED LIMIT				
	30 MPH	40 MPH	50 MPH	55 MPH	65 MPH
TEMPORARY POSITIVE BARRIER	8:1	11:1	14:1	16:1	20:1
BOX BEAM OR HEAVY POST CORRUGATED BEAM	7:1	9:1	11:1	12:1	15:1

TABLE 011-06
ADVANCE WARNING SIGN SPACING

ROAD TYPE	DISTANCE BETWEEN SIGNS			SIGN LEGEND	
	A (FT.)	B (FT.)	C (FT.)	XX	YY
URBAN (≤ 35 MPH*)	100	100	100	AHEAD	AHEAD
URBAN (35-40 MPH*)	200	200	200	AHEAD	AHEAD
URBAN (≥ 45 MPH*)	350	350	350	1000 FT.	AHEAD
RURAL	500	500	500	1500 FT.	1000 FT.
FREEWAY	1000	1500	2640	1 MILE	½ MILE

* PRECONSTRUCTION POSTED SPEED LIMIT.
** THIS TABLE IS THE SAME AS MUTCD TABLE NY6H-3.

TABLE 011-07
TAPER LENGTH FOR TEMPORARY TRAFFIC CONTROL ZONES

TYPE OF TAPER	TAPER LENGTH (L)
MERGING TAPER	L
SHIFTING TAPER	L/2
SHOULDER TAPER	L/3
ONE-LANE, TWO-WAY TRAFFIC TAPER	50 FT. MIN -100 FT. MAX
DOWNSTREAM TAPER	50 FT. MIN -100 FT. MAX

* THIS TABLE IS THE SAME AS MUTCD TABLE 6C-3.

FILE NAME = 619-011-2.dgn
DATE/TIME = 04-MAY-2023 10:57
USER = rfoote

NEW YORK STATE OF OPPORTUNITY. Department of Transportation

U.S. CUSTOMARY STANDARD SHEET

WORK ZONE TRAFFIC CONTROL
GENERAL TABLES AND LEGEND
(SHEET 2 OF 2)

ERRATA 2 EFF. 09/01/23
ISSUED WITH EB 23-016

ERRATA 1 EFF. 05/01/2023
ISSUED WITH EB 22-033

APPROVED DECEMBER 21, 2022
Robert Limoges
ROBERT LIMOGES, P.E.
DIRECTOR, OTSM

ISSUED UNDER EI 22-033

619-011

DRAWING NAME:
NYSDOT
Standard Sheets

Date: 4/22/24
Drawn By: P. Shendy
Scale: As Noted

DRAWING NO.
M-103

Project No: 23-4091

REVISIONS:

No.	Description	Date
1	Added per DOT comments	11/1/24

Proposed Multi-Family

4774 & 4780 Sheridan Drive
Amherst, NY

CARMINAWOOD DESIGN
Buffalo | Utica | Greensboro

WORK ZONE TRAFFIC CONTROL SIGN TABLE

SIGN	SIGN DESIGNATION	COLOR CODE	NON-FREEWAY	EXPRESSWAY	FREEWAY
EXIT	E5-1	C	--------	72"X60"	72"X60"
ROAD WORK NEXT 5 MILES	G20-1	A	36"X18"	48"X24"	48"X24"
END ROAD WORK	G20-2	A	36"X18"	48"X24"	48"X24"
FLAGGER PHONE NO.	G20-4	A	36"X18"	--------	--------
WORK ZONE	G20-5aP	A	24"X18"	36"X24"	36"X24"
22 22	M1-1	G	1 OR 2 DIGITS 24"X24"	36"X36"	36"X36"
495	M1-1†	G	3 DIGITS 30"X24"	45"X36"	45"X36"
X XX	M1-4	B	1 OR 2 DIGITS 24"X24"	36"X36"	36"X36"
XXX	M1-4†	B	3 DIGITS 30"X24"	45"X36"	45"X36"
NORTH	M3-1	SEE NOTE 3	24"X12"	36"X18"	36"X18"
EAST	M3-2				
SOUTH	M3-3				
WEST	M3-4				
DETOUR	M4-8	A	24"X12"	36"X18"	36"X18"
END DETOUR	M4-8a	A	24"X18"	24"X18"	24"X18"
DETOUR DETOUR DETOUR	M4-9 M4-9L M4-9R	A	30"X24"	48"X36"	48"X36"
DETOUR DETOUR	M4-9a	A	30"X24"	30"X24"	--------
DETOUR DETOUR	M4-9b	A	30"X24"	30"X24"	--------
45 DETOUR 45 DETOUR	M4-9c	A	30"X24"	30"X24"	--------
DETOUR	M4-10L	A	48"X18"	48"X18"	48"X18"
DETOUR	M4-10R				
	M5-1	SEE NOTE 3	21"X15"	30"X21"	30"X21"
	M5-2	SEE NOTE 3	21"X15"	30"X21"	30"X21"
	M6-1	SEE NOTE 3	21"X15"	30"X21"	30"X21"
	M6-2				
	M6-3				
	M6-4				
XX XX	NYM3-1	B	24"X24"	36"X36"	36"X36"
XXX	NYM3-2	B	30"X24"	45"X36"	45"X36"
XXXA	NYM3-3	B	30"X24"	45"X36"	45"X36"

WORK ZONE TRAFFIC CONTROL SIGN TABLE

SIGN	SIGN DESIGNATION	COLOR CODE	NON-FREEWAY	EXPRESSWAY	FREEWAY
FINES DOUBLED AFTER 1MO WORK ZONE SPEEDING TICKETS	NYR9-11	B	24"X42"	48"X84"	48"X84"
FINES DOUBLED FOR SPEEDING IN WORK ZONES	NYR9-12	B	24"X36"	36"X54"	48"X72"
FLAGGER STOPS	NYW4-17	A	36"X36"	48"X48"	48"X48"
WET PAINT	NYW8-30	A	48"X24"	48"X24"	48"X24"
STAY IN LANE	NYW8-31	A	48"X24"	48"X24"	48"X24"
DO NOT PASS	NYW8-32	A	48"X24"	48"X24"	48"X24"
LANE CLOSED	NYW8-33	A	48"X24"	48"X24"	48"X24"
STOP	R1-1	D	36"X36"	36"X36"	48"X48"
	R1-2	E	36"X36"X36"	48"X48"X48"	60"X60"X60"
SPEED XX	R2-1	B	24"X30" OR 30"X36" (SEE NOTE 5)	36"X48"	36"X48"
END BIGHER FINES ZONE	R2-11	B	24"X30"	36"X48"	36"X48"
END ROAD WORK SPEED LIMIT	R2-12	B	24"X36"	36"X54"	36"X54"
DO NOT PASS	R4-1	B	24"X30"	36"X48"	36"X48"
	R4-7	B	24"X30"	36"X48"	36"X48"
	R4-7c NARROW	B	18"X30"	--------	--------
	R4-8	B	24"X30"	36"X48"	36"X48"
	R4-8c NARROW	B	18"X30"	--------	--------
STAY IN LANE	R4-9	B	24"X30"	36"X48"	36"X48"
DO NOT ENTER	R5-1	E	36"X36"	36"X36"	48"X48"
R	R8-3	E	24"X24"	36"X36"	48"X48"
PEDESTRIAN CROSSWALK	R9-8	B	36"X18"	36"X18"	--------
SIDEWALK CLOSED	R9-9	B	24"X12"	24"X12"	--------
SIDEWALK CLOSED USE OTHER SIDE	R9-10	B	24"X12"	24"X12"	--------
SIDEWALK CLOSED USE OTHER SIDE	R9-10L R9-10R	B	24"X12"	24"X12"	--------
SIDEWALK CLOSED USE OTHER SIDE / SIDEWALK CLOSED CROSS HERE	R9-11L R9-11R	B	24"X18"	24"X18"	--------
SIDEWALK CLOSED CROSS HERE / SIDEWALK CLOSED CROSS HERE	R9-11aL R9-11aR	B	24"X12"	24"X12"	--------
STOP HERE ON RED	R10-6	B	24"X36"	24"X36"	--------

WORK ZONE TRAFFIC CONTROL SIGN TABLE

SIGN	SIGN DESIGNATION	COLOR CODE	NON-FREEWAY	EXPRESSWAY	FREEWAY
ROAD CLOSED / BRIDGE CLOSED	R11-2	B	48"X30"	48"X30"	48"X30"
BRIDGE OUT	R11-2 (MOD.)				
ROAD CLOSED XX MILES AHEAD LOCAL TRAFFIC ONLY	R11-3a	B	60"X30"	60"X30"	--------
	W1-4L W1-4R	A	36"X36"	48"X48"	48"X48"
	W1-4bL W1-4bR	A	36"X36"	48"X48"	48"X48"
	W1-4cL W1-4cR	A	36"X36"	48"X48"	48"X48"
	W1-6L	A	48"X24"	60"X30"	60"X30"
	W1-6R	A			
	W1-8L	A (NO BORDER)	18"X24"	30"X36"	30"X36"
	W1-8R	A (NO BORDER)			
	W3-1	A[4]	36"X36"	48"X48"	48"X48"
	W3-2	A[4]	36"X36"	48"X48"	48"X48"
	W3-3	A[4]	36"X36"	48"X48"	48"X48"
REFORD TO STOP	W3-4	A	36"X36"	48"X48"	48"X48"
55	W3-5	A[4]	36"X36"	48"X48"	48"X48"
	W4-1L W4-1R	A	36"X36"	48"X48"	48"X48"
	W4-2L W4-2R	A	36"X36"	48"X48"	48"X48"

WORK ZONE TRAFFIC CONTROL SIGN TABLE

SIGN	SIGN DESIGNATION	COLOR CODE	NON-FREEWAY	EXPRESSWAY	FREEWAY
TRAFFIC PATTERN AHEAD	NYW23-1	A	36"X36"	48"X48"	48"X48"
WORK ZONE	G20-5aP	GF.12	24"X18"	36"X24"	36"X24"
EXIT OPEN	E5-2	GF.28	48"X36"	48"X36"	48"X36"
EXIT CLOSED	E5-2a	GF.28	48"X36"	48"X36"	48"X36"

COLOR CODE LEGEND

CODE	DESCRIPTION
A	BLACK LEGEND AND BORDER ON AN ORANGE BACKGROUND
B	BLACK LEGEND AND BORDER ON A WHITE BACKGROUND
C	WHITE LEGEND AND BORDER ON A GREEN BACKGROUND
D	WHITE LEGEND AND BORDER ON A RED BACKGROUND
E	RED LEGEND AND BORDER ON A WHITE BACKGROUND
F	BLACK LEGEND AND BORDER ON A FLOURESCENT YELLOW GREEN BACKGROUND
G	WHITE LEGEND AND BORDER ON A BLUE AND RED BACKGROUND

NOTES:

1. DIMENSIONS ARE SHOWN AS WIDTH X HEIGHT.
2. FOR SIGNAGE NOT SHOWN ON THESE TABLES REFER TO THE M.U.T.C.D.
3. COLORS FOR DIRECTION PLAQUES, ADVANCE TURN ARROWS, AND DIRECTIONAL ARROWS SHALL MATCH THE ROUTE OR INTERSTATE SIGN THAT THEY SUPPLEMENT AS PER THE M.U.T.C.D.
4. MULTICOLORED SYMBOL IMPOSED ON SIGN WITH BLACK LEGEND AND BORDER ON AN ORANGE BACKGROUND.
5. FOR R2-1 SIGN LARGER DIMENSIONS SHALL BE USED WHEN SIGN FACES MULTIPLE LANES ON A CONVENTIONAL ROAD.

NEW YORK STATE OF OPPORTUNITY. Department of Transportation

U.S. CUSTOMARY STANDARD SHEET

WORK ZONE TRAFFIC CONTROL SIGN TABLE (SHEET 1 OF 3)

APPROVED DECEMBER 2, 2021 — ISSUED UNDER EI 21-028

Robert Limoges
ROBERT LIMOGES, P.E.
DIRECTOR, OTSM

619-012

FILE NAME = 619-WZ2-1.dgn
DATE/TIME = 05-APR-2024 13:31
USER = akurtgi

WORK ZONE TRAFFIC CONTROL SIGN TABLE

SIGN	SIGN DESIGNATION	COLOR CODE	NON-FREEWAY	EXPRESSWAY	FREEWAY
ROAD WARROWS	W5-1	A	36"X36"	48"X48"	48"X48"
LANE WARROWS	W5-4	A	36"X36"	48"X48"	48"X48"
	W6-3	A	36"X36"	48"X48"	48"X48"
NEXT 1 MILE	W7-3aP	A	24"X18"	36"X30"	36"X30"
BUMP	W8-1	A	36"X36"	48"X48"	48"X48"
PAVEMENT ENDS	W8-3	A	36"X36"	48"X48"	48"X48"
LOOSE GRAVEL	W8-7	A	36"X36"	48"X48"	48"X48"
ROUGH ROAD	W8-8	A	36"X36"	48"X48"	48"X48"
LOW SHOULDER	W8-9	A	36"X36"	48"X48"	48"X48"
NO CENTER LINE	W8-12	A	36"X36"	--------	--------
FALLING ROCK	W8-14	A	36"X36"	48"X48"	48"X48"
GROOVED PAVEMENT	W8-15	A	36"X36"	48"X48"	48"X48"
	W8-17	A	36"X36"	48"X48"	48"X48"
SHOULDER DROP-OFF	W8-17p	A	24"X18"	30"X24"	30"X24"
NO SHOULDER	W8-23	A	36"X36"	48"X48"	48"X48"
PLACE ON PAVEMENT	W8-24	A	36"X36"	48"X48"	48"X48"
LANE END SYMBOL	W9-3	A	36"X36"	48"X48"	48"X48"
	W11-1L* W11-1R	A OR F	36"X36"	36"X36"	--------
	W11-2L* W11-2R	F	36"X36"	36"X36"	--------
	W11-15L* W11-15R	F	36"X36"	36"X36"	--------
IN LANE	NYW5-32P*	A	24"X18"	24"X18"	--------

WORK ZONE TRAFFIC CONTROL SIGN TABLE

SIGN	SIGN DESIGNATION	COLOR CODE	NON-FREEWAY	EXPRESSWAY	FREEWAY
XX MPH	W13-1P	A	24"X24"	30"X30"	30"X30"
ON RAMP	W13-4	A	36"X36"	36"X36"	36"X36"
NO PASSING ZONE	W13-4P	A	48"X48"X36"	--------	--------
FOOG FEET	W16-2P	A	24"X18"	30"X24"	--------
NEXT 500 FT	W16-4P	SEE NOTE 3 A OR F	30"X24"	--------	--------
	W16-5PL W16-5PR	A	24"X18"	--------	--------
	W16-7PL W16-7PR	SEE NOTE 3 A OR F	24"X12"	30"X18"	--------
AHEAD	W16-9P	SEE NOTE 3 A OR F	24"X12"	30"X18"	--------
ROAD WORK AHEAD / ROAD WORK XX MILE / ROAD WORK NEXT XX MILE	W20-1	A	36"X36"	48"X48"	48"X48"
DETOUR AHEAD / DETOUR XXX FT / DETOUR X MILE	W20-2	A	36"X36"	48"X48"	48"X48"
FLAGGER AHEAD / FLAGGER AHEAD / FLAGGER NEXT XX MILE	W20-3	A	36"X36"	48"X48"	48"X48"
ONE LANE ROAD AHEAD / ONE LANE ROAD NEXT XX MILE / ONE LANE ROAD NEXT XX MILE	W20-4	A	36"X36"	48"X48"	48"X48"
LEFT LANE CLOSED AHEAD / LEFT LANE CLOSED NEXT XX MILE / LEFT LANE CLOSED NEXT XX MILE / LANE CLOSED AHEAD / LANE CLOSED NEXT XX MILE / LANE CLOSED NEXT XX MILE	W20-5	A	36"X36"	48"X48"	48"X48"
2 LEFT LANES CLOSED AHEAD / 2 LEFT LANES CLOSED NEXT XX MILE / 2 LEFT LANES CLOSED NEXT XX MILE / 2 RIGHT LANES CLOSED AHEAD / 2 RIGHT LANES CLOSED NEXT XX MILE / 2 RIGHT LANES CLOSED NEXT XX MILE	W20-5a	A	36"X36"	48"X48"	48"X48"
	W20-7	A	36"X36"	48"X48"	48"X48"

WORK ZONE TRAFFIC CONTROL SIGN TABLE

SIGN	SIGN DESIGNATION	COLOR CODE	NON-FREEWAY	EXPRESSWAY	FREEWAY
	W21-1	A	36"X36"	48"X48"	48"X48"
SLOW MOVING VEHICLE	W21-4	A	36"X18"	48"X24"	48"X24"
SHOULDER WORK	W21-5	A	36"X36"	48"X48"	48"X48"
LEFT SHOULDER CLOSED / RIGHT SHOULDER CLOSED	W21-5aL W21-5aR	A	36"X36"	48"X48"	48"X48"
LEFT SHOULDER CLOSED NEXT XX MILE / RIGHT SHOULDER CLOSED NEXT XX MILE / LEFT SHOULDER CLOSED NEXT XX MILE / RIGHT SHOULDER CLOSED NEXT XX MILE	W21-5bL W21-5bR	A	36"X36"	48"X48"	48"X48"
REFORD AHEAD	W21-8	A	36"X36"	48"X48"	48"X48"
BLASTING ZONE NEXT XX MILE / BLASTING ZONE NEXT XX MILE	W22-1	A	36"X36"	48"X48"	48"X48"
TURN OFF 2 WAY RADIO CELL PHONE	W22-2	A	42"X36"	42"X36"	42"X36"
END BLASTING ZONE	W22-3	A	42"X36"	42"X36"	42"X36"
SLOW TRAFFIC AHEAD	W23-1	A	48"X24"	48"X24"	48"X24"
NEW TRAFFIC PATTERN AHEAD	W23-2	A	36"X36"	48"X48"	48"X48"

COLOR CODE LEGEND

CODE	DESCRIPTION
A	BLACK LEGEND AND BORDER ON AN ORANGE BACKGROUND
B	BLACK LEGEND AND BORDER ON A WHITE BACKGROUND
C	WHITE LEGEND AND BORDER ON A GREEN BACKGROUND
D	WHITE LEGEND AND BORDER ON A RED BACKGROUND
E	RED LEGEND AND BORDER ON A WHITE BACKGROUND
F	BLACK LEGEND AND BORDER ON A FLOURESCENT YELLOW GREEN BACKGROUND
G	WHITE LEGEND AND BORDER ON A BLUE AND RED BACKGROUND

NOTES:

1. DIMENSIONS ARE SHOWN AS WIDTH X HEIGHT.
2. FOR SIGNAGE NOT SHOWN ON THESE TABLES REFER TO THE M.U.T.C.D.
3. WHEN USED IN CONJUNCTION WITH A BICYCLE SIGN (W11-1) OR PEDESTRIAN CROSSING (W11-2) COLOR CODE SHALL MATCH.

* A FLOURESCENT YELLOW-GREEN BACKGROUND COLOR SHALL BE USED FOR THIS SIGN PLAQUE.

ERRATA 1 EFF. 05/01/24
ISSUED WITH EB 24-007

NEW YORK STATE OF OPPORTUNITY. Department of Transportation

U.S. CUSTOMARY STANDARD SHEET

WORK ZONE TRAFFIC CONTROL SIGN TABLE (SHEET 2 OF 3)

APPROVED DECEMBER 2, 2021 — ISSUED UNDER EI 21-028

Robert Limoges
ROBERT LIMOGES, P.E.
DIRECTOR, OTSM

619-012

FILE NAME = 619-WZ2-2.dgn
DATE/TIME = 27-FEB-2024 13:31
USER = akurtgi

Project No: 23-4091

M-104

Date: 4/22/24
Drawn By: P. Shendy
Scale: As Noted

DRAWING NO.

DRAWING NAME: NYSDOT Standard Sheets

STATE OF NEW YORK — PROFESSIONAL ENGINEER — LICENSED PROFESSIONAL ENGINEER

REVISIONS:

No.	Description	Date
1	Added per DOT comments	11/1/24

Proposed Multi-Family

4774 & 4780 Sheridan Drive
Amherst, NY

CARMINAWOOD DESIGN
Buffalo | Utica | Greensboro

WORK ZONE TRAFFIC CONTROL SIGN TABLE

SIGN	SIGN DESIGNATION	COLOR CODE	NON-FREEWAY	EXPRESSWAY	FREEWAY
	W24-1L W24-1R	A	36"X36"	48"X48"	48"X48"
	W24-1aL W24-1aR	A	36"X36"	48"X48"	48"X48"
	W24-1bL W24-1bR	A	36"X36"	48"X48"	48"X48"

WORK ZONE TRAFFIC CONTROL SIGN TABLE

SIGN	SIGN DESIGNATION	COLOR CODE	NON-FREEWAY	EXPRESSWAY	FREEWAY
SPEED LIMIT XX	R2-1	B	24"X30" OR 30"X36" (SEE NOTE 3)	36"X48"	36"X48"
STATE SPEED LIMIT 55	NYR2-2	B	24"X30" OR 30"X36" (SEE NOTE 3)	36"X48"	36"X48"
AREA SPEED LIMIT 45	NYR2-3	B	24"X30" OR 30"X36" (SEE NOTE 3)	36"X48"	36"X48"
CITY SPEED LIMIT 35	NYR2-4	B	24"X30" OR 30"X36" (SEE NOTE 3)	36"X48"	36"X48"
VILLAGE SPEED 30	NYR2-5	B	24"X30" OR 30"X36" (SEE NOTE 3)	36"X48"	36"X48"
TOWN SPEED LIMIT 45	NYR2-6	B	24"X30" OR 30"X36" (SEE NOTE 3)	36"X48"	36"X48"

COLOR CODE LEGEND

CODE	DESCRIPTION
A	BLACK LEGEND AND BORDER ON AN ORANGE BACKGROUND
B	BLACK LEGEND AND BORDER ON A WHITE BACKGROUND
C	WHITE LEGEND AND BORDER ON A GREEN BACKGROUND
D	WHITE LEGEND AND BORDER ON A RED BACKGROUND
E	RED LEGEND AND BORDER ON A WHITE BACKGROUND
F	BLACK LEGEND AND BORDER ON A FLOURESCENT YELLOW GREEN BACKGROUND
G	WHITE LEGEND AND BORDER ON A BLUE AND RED BACKGROUND

NOTES:

1. DIMENSIONS ARE SHOWN AS WIDTH X HEIGHT.
2. FOR SIGNAGE NOT SHOWN ON THESE TABLES REFER TO THE M.U.T.C.D.
3. FOR R2-1 SIGN LARGER DIMENSIONS SHALL BE USED WHEN SIGN FACES MULTIPLE LANES ON A CONVENTIONAL ROAD.

FILE NAME = 619-012-3.Ele.dgn
DATE/TIME = 27-FEB-2024 15:32
USER = akurfagl

ERRATA 1 EFF. 05/01/24
ISSUED WITH EB 24-007

NEW YORK STATE OF OPPORTUNITY. Department of Transportation

U.S. CUSTOMARY STANDARD SHEET

WORK ZONE TRAFFIC CONTROL
SIGN TABLE
(SHEET 3 OF 3)

APPROVED DECEMBER 2, 2021
Robert Limoges
ROBERT LIMOGES, P.E.
DIRECTOR, OTSM

ISSUED UNDER EI 21-028
619-012

Date: 4/22/24
Drawn By: P. Shendy
Scale: As Noted
DRAWING NO. M-105
Project No: 23-4091

DRAWING NAME:
NYSDOT
Standard Sheets

STATE OF NEW YORK
PROFESSIONAL ENGINEER

REVISIONS:

No.	Description	Date
1	Added per DOT comments	11/1/24

Proposed Multi-Family

4774 & 4780 Sheridan Drive
Amherst, NY

CARMINAWOOD DESIGN
Buffalo | Utica | Greensboro